EVALUATION OF STORAGE AND BENEFICIAL REUSE ALTERNATIVES FOR SURFACE WATERS DISCHARGED FROM LAKE TARPON, FLORIDA

Douglas E. Robison, P.W.S. and Thomas Farkas, P.G.[1]

ABSTRACT: With a surface area of 4 square miles, Lake Tarpon is one of the largest natural lakes in west central Florida. To relieve periodic flooding in this historically closed basin, the construction of an outfall canal and control structure was completed in 1970. Subsequent static lake levels and watershed urbanization resulted in the degradation of shoreline vegetation, water quality, and sport fisheries. A watershed management plan completed in 1998 recommended the implementation of an enhanced lake level fluctuation schedule to restore fish habitat and water quality. It was estimated that this management action would result in the annual loss of over 1.8 billion gallons of water to tide. A subsequent feasibility study was conducted to evaluate the storage and beneficial reuse of surface waters discharged from Lake Tarpon. Aquifer storage and recovery (ASR) was determined to be the most feasible storage alternative; whereas the preferred beneficial reuse alternatives included lake dilution and flushing, and augmentation of the local reclaimed water supply. Four operational scenarios were developed including harvesting, storing, and recovering discharged surface waters.
KEY TERMS: lake management; aquifer storage and recovery; beneficial reuse.

INTRODUCTION

Lake Tarpon is located in Pinellas County, Florida, immediately north and west of Tampa Bay (Figure 1). With a surface area of 4 square miles, Lake Tarpon is one of the largest natural lakes in west central Florida.

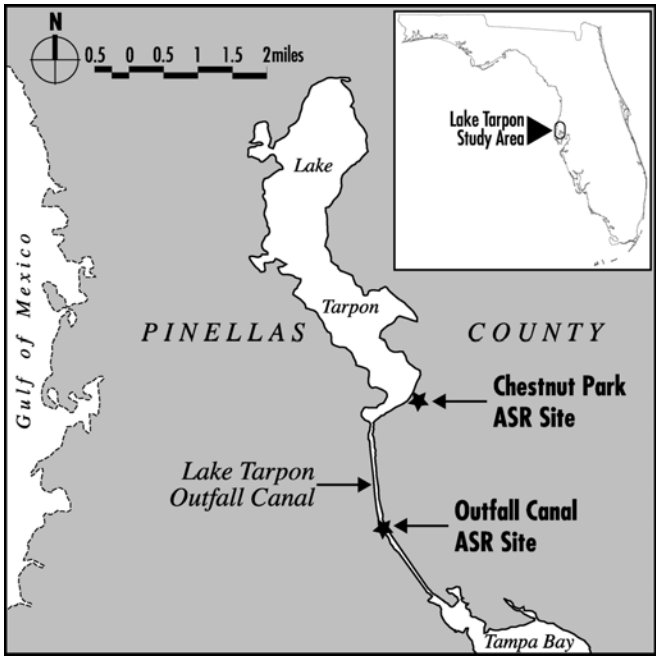

Figure 1. Lake Tarpon, Florida - Location Map.

1 Respectively, Ecological Sciences Program Manager and Senior Hydrogeologist, PBS&J, 5300 West Cypress Street, Suite 300, Tampa, FL 33607; Phone: (813) 282-7275; Fax: (813) 287-1745; E-Mail: drobison@pbsj.com.

To relieve periodic flooding in this historically closed basin, the construction of an outfall canal and control structure was completed in 1970. Subsequent static lake levels and watershed urbanization resulted in the degradation of shoreline vegetation, water quality, and sport fisheries. In October 1998, the Pinellas County Board of County Commissioners formally adopted the *Lake Tarpon Drainage Basin Management Plan* (Plan). Because concern over declining water quality and sport fisheries was the original driving force behind the planning process, the primary focus of the Plan was the development and evaluation of various structural and non-structural measures to reduce pollutant loadings and restore natural habitats, while maintaining effective public flood protection.

A major component of the Plan calls for the implementation of an enhanced lake-level fluctuation schedule (Figure 2). This management action involves modifying the operational schedule of the Lake Tarpon outfall

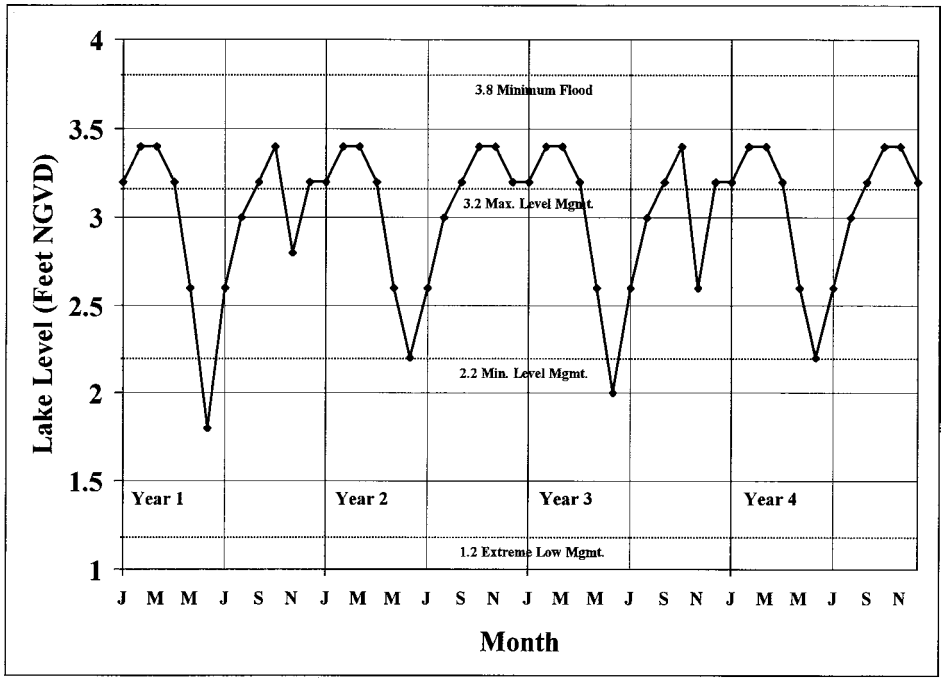

Figure 2. Lake Tarpon Enhanced Lake-Level Fluctuation Schedule.

canal control structure (S-551) so as to reestablish a more natural pattern of seasonal and inter-annual variation in lake levels that is to be repeated every four years. High water elevations of 3.4 feet NGVD occur during both the winter and summer months. These lake-level highs are intended to flood littoral vegetation and control the expansion and proliferation of nuisance species, predominantly cattails and willows. Low water elevations range from 1.8 to 2.2 feet NGVD, and are to occur in the spring and fall. Theoretically, the spring discharge should result in the flushing and dilution of in-lake nutrient concentrations prior to the summer growing season. On the other hand, the fall discharge is intended to flush nutrient-rich runoff accumulated from the summer rainy season. The recommended four-year lake-level fluctuation schedule is intended to better simulate the natural hydrologic regime while still maintaining consistency with the operational range established by the U.S. Army Corps of Engineers for flood control.

Although the S-551 structure provides a very flexible and cost-effective means of fluctuating lake levels, the discharge of lake water into the saline waters of Old Tampa Bay results in an irrevocable loss of a substantial volume of potentially reusable freshwater. If, however, this water could be harvested, stored, and later recovered for various beneficial reuses, it would constitute a significant new water supply source for the Tampa Bay region. Based on the calculation that each one-foot reduction in the lake level is equal to about 800 million gallons, approximately 1.8 billion gallons of discharge water will be generated annually during years 1 and 3, and 1.1 billion gallons will be generated during years 2 and 4.

The estimated volumes of potentially available surface water include only discharge water, and assume no substantial losses due to evapotranspiration and minor consumptive uses for local irrigation. Nonetheless, these estimates are likely to be very conservative in that they also do not take into account the additional surface water that would flow over the Lake Tarpon outfall canal control structure after target lake levels are attained. These additional wet-weather overflows would be available during normal wet seasons, and follow-

ing abnormal rainfall events such as tropical storms. Based on historical gage data, it is reasonable to conclude that the annual average volume of water discharged through the Lake Tarpon outfall canal will almost always exceed 3.4 billion gallons, even under the driest hydrologic conditions. Under normal hydrologic conditions, the total annual volume is expected to be approximately double this amount. In order to be a viable water supply source, however, effective means of storing, recovering, and distributing the lake discharge water will be required. If the entire conservative volume estimate of 3.4 billion gallons could be harvested, stored, and reliably recovered, it would yield a daily freshwater flow of approximately 9.3 mgd available for beneficial reuse.

Recognizing the potential for a significant new water supply source, Pinellas County in 2000 authorized PBS&J to proceed with an evaluation of potential storage and beneficial reuse alternatives for Lake Tarpon discharge water. The remainder of this paper summarizes that work.

EVALUATION OF STORAGE ALTERNATIVES

Only two storage alternatives were considered to be potentially feasible, including: 1) surface water storage; and, 2) aquifer storage and recovery (ASR). These alternatives are discussed below.

Surface Water Storage

Surface water storage would involve the diversion of waters discharged from the Lake Tarpon outfall canal to one or more reservoirs. If only the volumes released during scheduled lake drawdowns were to be harvested, the minimum annual storage volume required would range between 1.1 and 1.8 billion gallons. The larger volume equates to 2.2 feet over the 2,500-acre surface area of Lake Tarpon, or about 5,500 acre-feet of storage. Groundwater elevations in the Lake Tarpon watershed are at or slightly below the land surface, therefore, little or no below-ground storage is available. Given the local hydrogeology and soils, the maximum practicable height of an earthen containment berm was considered to be about 9 feet. With a berm height of 9 feet, the land surface area required for reservoir construction would be approximately 611 acres. It should be noted that this estimate was considered to be very conservative in that it assumes that no residual volume would be retained from year to year. To fully meet the objectives of the storage and recovery concept, however, some residual storage would be necessary. The majority of the Lake Tarpon watershed is densely urbanized. While there are several vacant parcels in the watershed that do meet the minimum size criteria, they are virtually all natural swamps that are under public ownership and designated as preservation and conservation lands. Because these areas are not suitable for reservoir construction, surface water storage was determined to not be a feasible alternative in the Lake Tarpon watershed.

Aquifer Storage and Recovery

ASR is essentially the storage of water in suitable subsurface storage zones when excess water is available, and the recovery of that stored water when the water is needed. Typically, storage is accomplished by injecting water into a suitable geologic storage zone (formation), through a well, and later using the same well for recovery of the stored water. Subsurface storage zones vary in nature and are typically moderate to high permeable geologic units that demonstrate some level of containment (confinement) and can readily accept and yield water through wells. These units may be confined, semi-confined, or even unconfined; and may contain freshwater, brackish water, or even saline water. If properly implemented, ASR has been shown to be a viable, cost-effective water resource management tool that can provide significant advantages over conventional surface storage facilities. The ability to store vast quantities of water (usually orders of magnitude greater than surface facilities) in suitable subsurface geologic formations through a single well typically results in a huge capital cost saving over conventional surface storage facilities. The use of ASR also protects the stored waters from surface contamination, and maximizes water conservation by eliminating evaporative loss.

The permitting of a surface water ASR system is conducted at the state level and follows the same general guidelines as those used for reclaimed water ASR. The two primary regulatory agencies responsible for permitting ASR facilities are the Florida Department of Environmental Protection (FDEP) and Southwest Florida Water Management District (SWFWMD). The FDEP regulates ASR wells as Class V injection wells during construction and recharge, while SWFWMD regulates ASR wells as water supply production facilities during the recovery (withdrawal) phase. Local agencies such as health and environmental protection departments may also play a role. The quality of the surface waters being injected, and the groundwater in the subsurface receiving zones, play a key role in the permitting process. In general, ambient groundwater quality must be

worse than the surface waters proposed for injection. To have a Class V ASR well permitted in Florida, the applicant must demonstrate that the surface waters to be injected are at least equivalent in quality to secondary treated effluent with disinfection. The water quality criteria also specify that the surface waters must meet all federal primary drinking water standards, as well as non-federal primary and secondary drinking water standards or ambient groundwater conditions (whichever is poorer).

A major component of the evaluation performed for Pinellas County included a surface water ASR feasibility study. This study analyzed several general and site-specific criteria to determine the feasibility of implementing a surface water ASR system in the Lake Tarpon vicinity for the purposes of storing and recovering harvested discharge water. General criteria included permittability; surface water availability; and surface water quality. Site-specific criteria included: presence of a suitable subsurface storage zone; ambient groundwater quality; competing uses within the local area; compatibility of recovered water with potential beneficial reuse alternatives; and site construction and operational constraints.

Two ASR test well sites were identified during the course of this study including Chestnut Park on the southeast shore of Lake Tarpon, and the Lake Tarpon outfall canal land near the control structure approximately 9,000 feet south of Lake Tarpon (see Figure 1). Based on an analysis of existing data for the criteria listed above, development of ASR wells at both test sites was considered feasible. Subsequent exploratory testing at the outfall canal site revealed very poor ambient groundwater quality and marginal confinement of the storage zone. Exploratory testing at the Chesnut Park site is currently underway and preliminary results indicate more favorable conditions for future ASR well development.

EVALUATION OF BENEFICIAL REUSE ALTERNATIVES

After determining that ASR is likely to be a viable storage alternative for surface waters discharged from Lake Tarpon, the next phase of the work effort involved the evaluation of various beneficial reuse alternatives. It should be noted that the primary need and justification for the storage, recovery, and reuse of lake discharge water is to support certain lake management activities. Other uses and benefits are considered by Pinellas County to be secondary to those that support lake management activities specified in the Plan. Nonetheless, several other beneficial reuse alternatives were considered including: 1) augmentation of the Pinellas County reclaimed water supply; 2) augmentation of the regional potable water supply; 3) rehydration of adversely impacted wetlands; and 4) restoration of tributary baseflows.

To evaluate the relative merits of the five reuse alternatives considered, a weighted decision matrix was developed and applied, and then used to prioritize the reuse alternatives. The criteria applied in the evaluation of the five reuse alternatives included: 1) demonstrated need or demand; 2) public acceptance; 3) environmental or public health impacts; 4) regulatory permittability; 5) construction cost; and 6) operation and maintenance cost. Augmentation of the regional potable water supply was ranked low primarily because, for this alternative to be economically viable, greater volumes of freshwater would likely need to be withdrawn compared to the augmentation of the reclaimed water supply. Consequently, there would be a greater potential for adverse environmental impacts to Lake Tarpon, and possibly to the Old Tampa Bay estuary downstream of the outfall canal. The alternatives of rehydration of adversely impacted wetlands and restoration of tributary baseflows were ranked lowest because the long-term need for surface water augmentation of wetlands and stream baseflows has not been demonstrated in light of several ongoing management initiatives aimed at improving hydrologic conditions in the Lake Tarpon watershed. In addition, the cost and potential adverse impacts associated with extending a pipeline(s) through extensive wetlands may be too restrictive, irrespective of the potential ecological benefits of these alternatives. Based on this analysis, only lake management and augmentation of the Pinellas County reclaimed water supply were considered to be viable alternatives. They are discussed briefly below.

Lake Management

Under the more or less static lake levels that have existed since the construction of the Lake Tarpon outfall canal control structure nuisance and exotic aquatic plant species have proliferated and overrun desirable native species. The primary benefit of the enhanced lake-level fluctuation schedule is to reduce the coverage of nuisance and exotic aquatics, predominantly cattails, willows, and hydrilla, and to encourage the proliferation of native aquatics such as eel grass and bulrush.

Another benefit of the enhanced lake-level fluctuation schedule is in-lake water quality improvement through increased dilution and flushing. The use of water recovered from an ASR well to refill the lake following lake

level drawdowns has the potential to dilute in-lake concentrations of total nitrogen (TN) and total phosphorus (TP), and to further decrease lake retention time by adding a source of inflow water that does not currently exist. Based on box model analyses, the replacement of the entire 4,000 acre-feet of lake water discharged during the spring lake-level drawdown specified for Year 1 of the recommended enhanced lake-level fluctuation schedule with recovered ASR water would result in a net reduction in water column TN concentrations of approximately 1.9 tons, which equals about 3.5 percent of the annual TN load to the lake. Dilution of nutrient concentrations will occur because the stored discharge water will be exposed to several modes of treatment prior to recovery including pretreatment prior to injection, as well as natural treatment processes in the aquifer during the storage period.

Augmentation of Pinellas County Reclaimed Water Supply

Pinellas County provides reclaimed water (e.g., tertiary treated wastewater) to users in the northern portion of the county to partially offset the use of potable water supplies for irrigation. The entire current supply of reclaimed water is generated at a single wastewater treatment plant, and is conveyed through an extensive interconnected regional distribution system. The primary users of reclaimed water are several local golf courses that account for approximately 70 percent of the total demand; whereas residential developments, schools, and light industry account for the remainder. In 1999 the annual deficit in reclaimed water supply was approximately 580 million gallons, which on a daily average basis equated to approximately 1.6 mgd. Deficits are greatest during the dry season (e.g, March–May) when regional rainfall is sparse. Demand for reclaimed water in the north county area has continued to increase, therefore, deficits are expected to increase without a reliable augmentation source.

The use of Lake Tarpon surface water in conjunction with an ASR system was determined to be a viable option for supplementing the county reclaimed water supply. Lake surface waters could be captured and stored in ASR wells during implementation of the enhanced lake-level fluctuation schedule, and possibly also during wet-weather discharges. During the dry season when the demand for reclaimed water is greatest, either stored water recovered from the ASR wells or surface water pumped directly from Lake Tarpon could be used to augment the reclaimed water supply. During drought conditions and low lake levels, surface water would not be pumped directly from the lake to augment the reclaimed water system. However, stored water in the ASR well system would still be available to supplement the reclaimed water system, or to augment lake levels. It is estimated that approximately five, 1-mgd ASR wells would be needed at buildout to reliably supplement the reclaimed water system in order to meet both current and future reclaimed water demands.

Integrated Operational Scenarios

Four ASR operational scenarios were developed to illustrate the potential uses and benefits of stored/recovered surface water (Figures 3A through 3D). Options A and B represent basic operational scenarios that can be implemented with the construction of a single ASR well, intake/discharge piping to Lake Tarpon, a limited surface water treatment facility utilizing filtration and disinfection, and a tie-in line to the reclaimed water system. Option C is a combination of ASR Options A and B that employs recovery to both the lake and the reclaimed water system. Option D represents more ambitious utilization of the available water resources in the Lake Tarpon area. All four options are dependent upon the harvesting of a portion of Lake Tarpon water discharged during the spring and fall lake-level drawdowns, and also a portion of the water discharged during wet-weather overflows.

- Option A – The captured water is stored within an ASR well(s) system and recovered from the well(s) at a later date for Lake Tarpon water level augmentation during drought periods and for increased dilution and flushing.
- Option B – The captured water is stored within an ASR well system and recovered from the well(s) at a later date to supplement the Pinellas County reclaimed water system. In addition, during periods when lake water is pumped to the ASR well(s), which results in the well(s) not being available to supplement the reclaimed supply, some of the lake water can be diverted directly from Lake Tarpon to the reclaimed water system.
- Option C – This option combines the operational components of Options A and B and allows maximization of the single ASR well concept with storage of lake water followed by recovery to augment lake water levels and also supplement the reclaimed water system. Seasonal and yearly variations in the supply and demands of

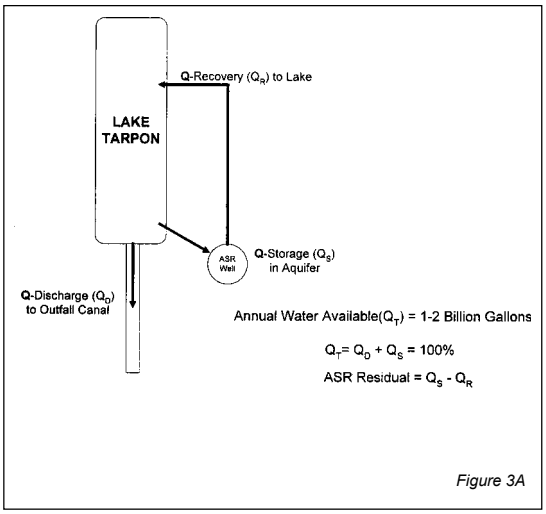

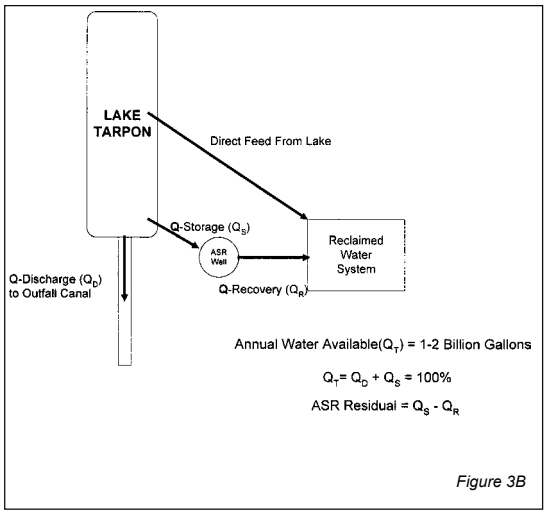

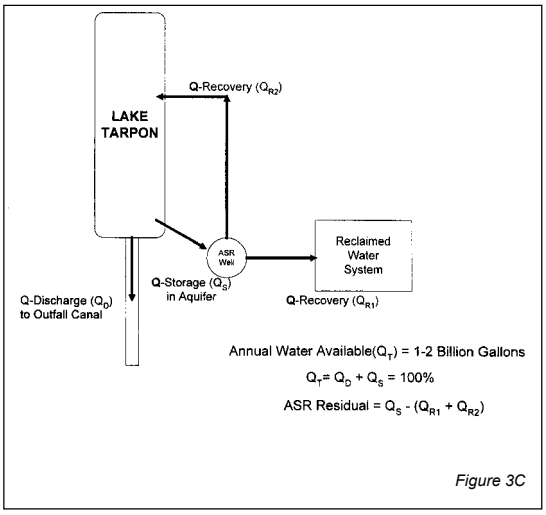

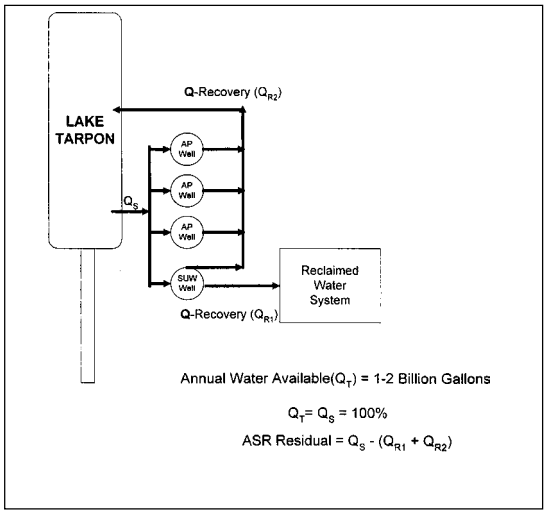

Figures 3A, 3B, 3C, 3D. ASR Operational Scenarios for Lake Tarpon Recovered Surface Water.

the reclaimed water system and also naturally occurring lake level recovery will largely determine how the ASR well system is managed.

- Option D – This option involves the capture of all or a significant portion of the water discharged annually through the Lake Tarpon outfall canal, including all lake discharge water and a significant portion of the wet-weather overflows. Due to the potentially larger volume of available water, a network of ASR wells would be necessary. Only a small portion of the captured water would be needed to augment the reclaimed water supply and manage the lake level during periodic droughts. The majority of the stored water would serve to "flood" subsurface storage zones in the Lake Tarpon area with freshwater, thereby creating a lateral hydraulic barrier to the migration of saltwater from areas south and west of the lake and a vertical hydraulic barrier from poorer quality water found at depth within the Lake Tarpon area. The stored water could also potentially provide a future potable water supply with the appropriate treatment.

Based on the current needs and demands, Option C was recommended as the preferred ASR operational scenario. This option would meet both the primary lake management objectives as well as the highest priority secondary objective of augmenting the Pinellas County reclaimed water supply. Option D represents a more aggressive approach to the same multi-use concept; however, it should only be pursued after sufficient hydrogeologic and water quality data have been collected from a single ASR system operating under Options A, B, or C. As stated above, Pinellas County is currently conducting exploratory testing at the second ASR test well site. If findings confirm that ASR well development is feasible, implementation of Options A, B, or C is expected.