PINELLAS COUNTY

STANDARD DETAILS

FEB / 2022

CERTIFICATION STATEMENT

I HEREBY CERTIFY THAT THESE DETAILS WERE PREPARED BY ME OR UNDER MY RESPONSIBLE CHARGE, COMPILED FROM DESIGNS PREPARED, EXAMINED, ADOPTED AND IMPLEMENTED BY PINELLAS COUNTY.

SHEET INDEX

PW1105
PW1108
PW1109
PW1110
PW1111
PW1250
PW1255
PW1260
PW1265
PW1270
PW1281
PW1282
PW1290
PW1291
PW1305
PW1315
PW1340
PW1345
PW1357
PW1361
PW1365

PRINTED COPIES OF THIS DOCUMENT ARE NOT CONSIDERED SIGNED AND SEALED AND THE SIGNATURE MUST BE VERIFIED ON ANY ELECTRONIC COPIES.

PINELLAS COUNTY
14 S. FT HARRISON
CLEARWATER, FLORIDA 33765
MONA R. GABRIEL, P.E. 90359

THE ABOVE NAMED PROFESSIONAL ENGINEER SHALL BE RESPONSIBLE FOR THE FOLLOWING SHEETS IN ACCORDANCE WITH RULE 61G15-23.004, F.A.C.

SHEET INDEX

PW1380
PW1406
PW1700
PW1701
PW1705
PW1706
PW1710
PW1720
PW1725
PW1730
PW1731

PRINTED COPIES OF THIS DOCUMENT ARE NOT CONSIDERED SIGNED AND SEALED AND THE SIGNATURE MUST BE VERIFIED ON ANY ELECTRONIC COPIES.

PINELLAS COUNTY
22211 US. 19
CLEARWATER, FLORIDA 33765
THOMAS E. WASHBURN, P.E. 50113

THE ABOVE NAMED PROFESSIONAL ENGINEER SHALL BE RESPONSIBLE FOR THE FOLLOWING SHEETS IN ACCORDANCE WITH RULE 61G15-23.004, F.A.C.

MAY / 2022

PINELLAS COUNTY
STANDARD DETAILS

ROADWAY AND RELATED CONSTRUCTION:

1100 ENVIRONMENTAL
- 1105: Median Soil: Composition and Depth
- 1108: Sabal Planting
- 1109: Palm Planting
- 1110: Tree Planting
- 1111: Tree Protection

1200 DRAINAGE AND DRAINAGE STRUCTURES
- 1250: Storm Sewer Cover
- 1255: P.C.E.D Curb Inlets (Types RC-3, 4 and 5)
- 1260: P.C.E.D. J5 & J6 Curb Inlets
- 1265: Filter Fabric Wrap and Grout at Structures
- 1270: Anti-Clogging Device for Pond Outfall Control Structures
- 1281: Underdrain Inspection Manhole Type 1
- 1282: Underdrain Inspection Manhole Type 2
- 1290: Roadside Underdrain Installation
- 1291: Pavement Cuts, Excavation & Restoration

1300 CURBS, DRIVEWAYS, PAVEMENT AND SIDEWALKS
- 1305: Curb and Gutter Type A and Header Curb
- 1315: Valley Gutter and Transition
- 1340: Concrete Driveway Apron
- 1345: Residential Driveway/Sidewalk Paver
- 1357: Guidelines for Sidewalk Alignment
- 1361: P.C.E.D. Sidewalk/Trail Connection
- 1365: P.C.E.D. Trail Intersection Crossing
- 1380: Traffic Sign Installation Into Concrete

1400 BARRIERS, BARRICADED AND FENCES
- 1406: Barricade with Reflectors

1700 TRAFFIC
- 1700: Concrete Square CCTV Camera Pole
- 1701: Fiber Optic Pull Boxes
- 1705: CCTV Mounting Detail
- 1706: CCTV Pole Mount
- 1710: Electronic Route Marker Detail
- 1720: VVDS Installation Details
- 1725: Mast Arm Conduit Entrance Detail
- 1730: Dynamic Message Sign
- 1731: Traffic Controller Cabinet

PINELLAS COUNTY STANDARD DETAILS INDEX SHEET	DETAIL INDEX I.D.: INDEX DATE: FEB/2022

NOTES:
1. GROUND SURFACE ELEVATION OF MEDIAN SHALL BE AS SHOWN ON APPROVED PLANS.
2. MEDIAN FILL SOIL, FOR AREAS THAT ARE EXCAVATED, MUST BE NATIVE SITE SOILS APPROVED BY THE ENGINEER.

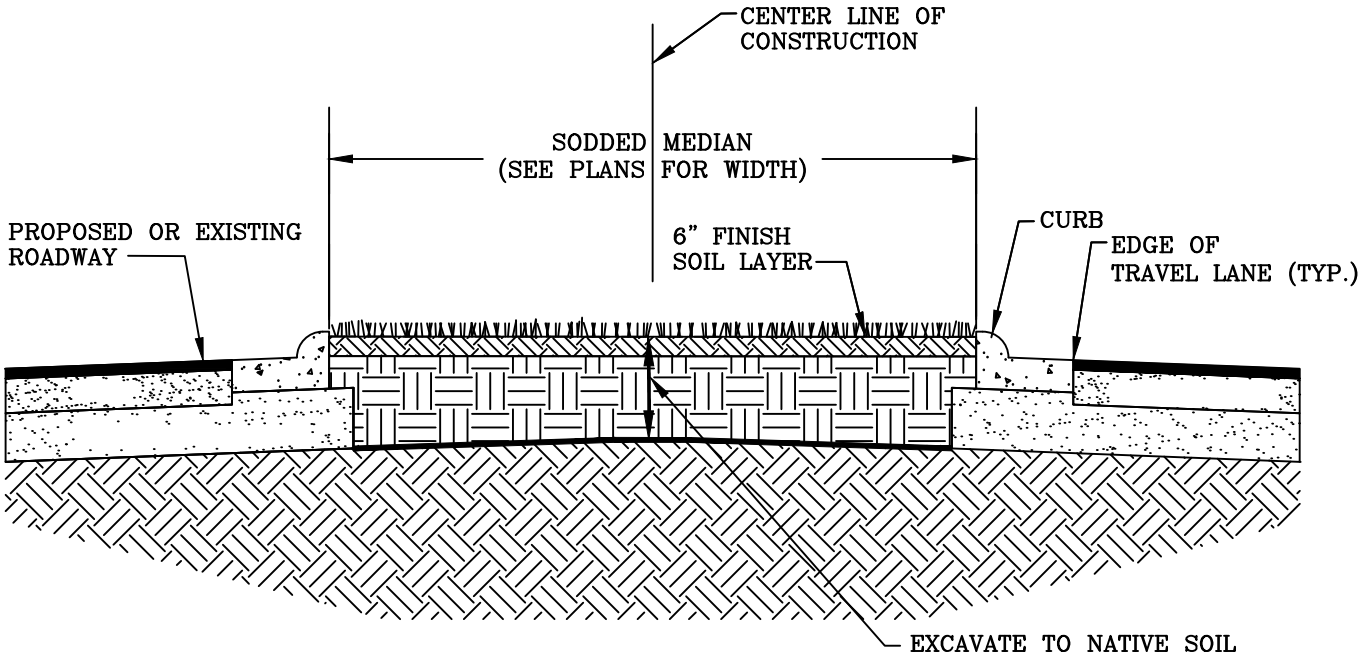

TYPICAL SECTION
NTS

PINELLAS COUNTY

LANDSCAPING MEDIAN SOIL COMPOSITION AND DEPTH

DETAIL INDEX I.D.: 1105

DATE: FEB/2022

NOTES:

1. OTHER TREE STAKING SYSTEMS MAY BE ACCEPTABLE IF APPROVED BY COUNTY.

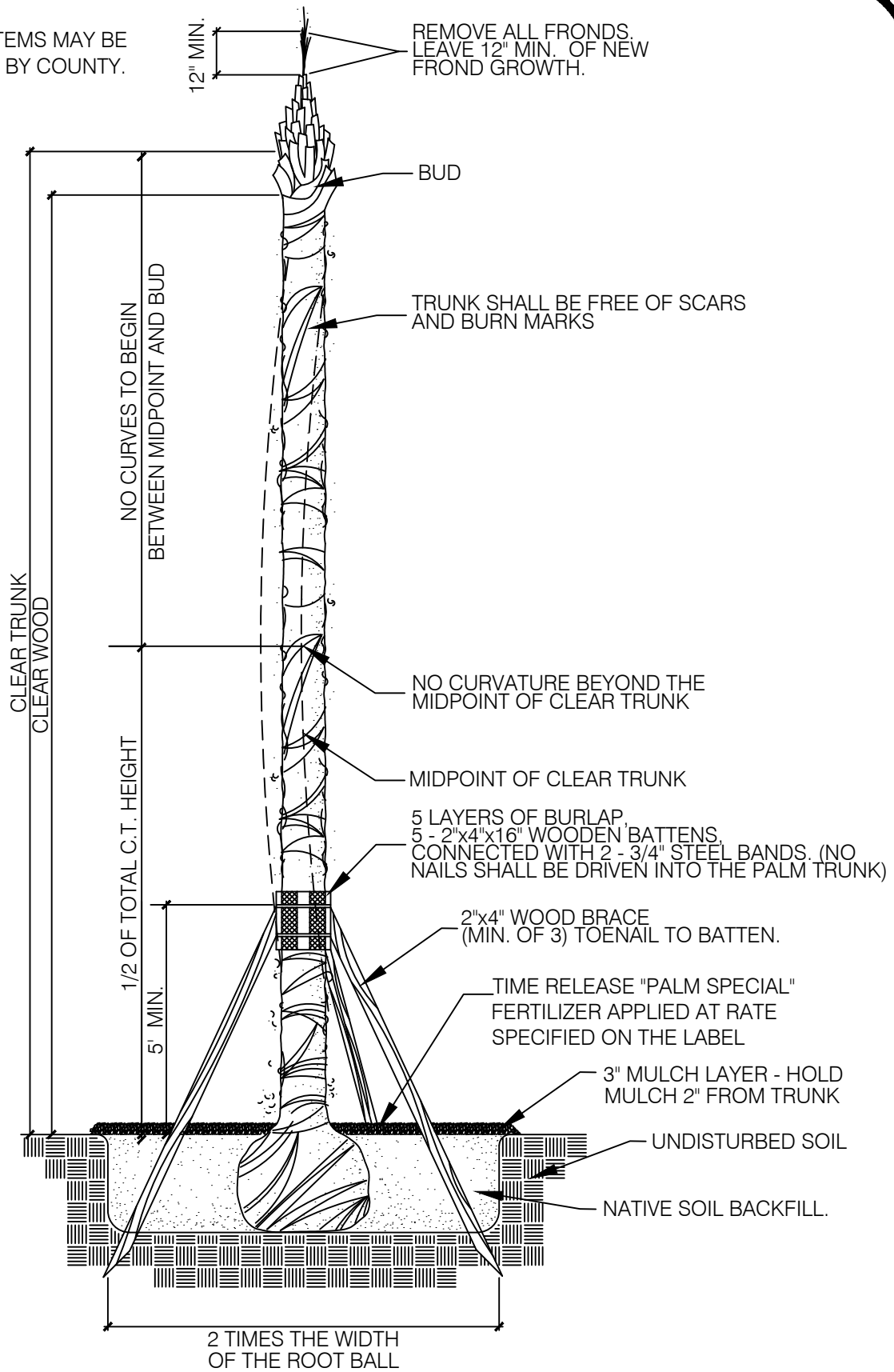

PINELLAS COUNTY

SABAL PLANTING DETAIL

DETAIL INDEX I.D.: 1108

DATE: FEB/2022

NOTES:

1. OTHER TREE STAKING SYSTEMS MAY BE ACCEPTABLE IF APPROVED BY COUNTY.

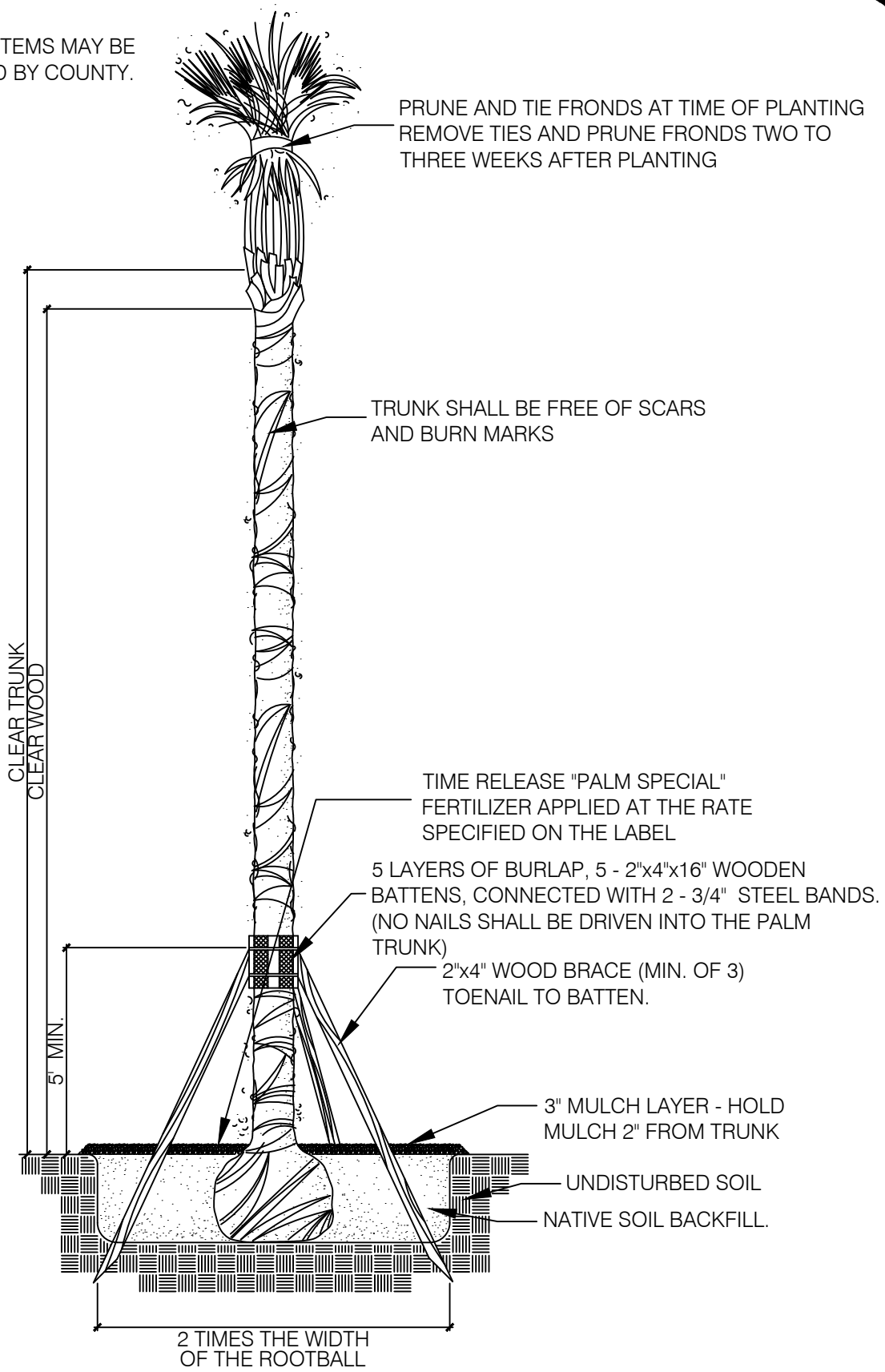

PINELLAS COUNTY

PALM PLANTING DETAIL

DETAIL INDEX I.D.: 1109

DATE: FEB/2022

NOTES:

1. OTHER TREE STAKING SYSTEMS MAY BE ACCEPTABLE IF APPROVED BY COUNTY.

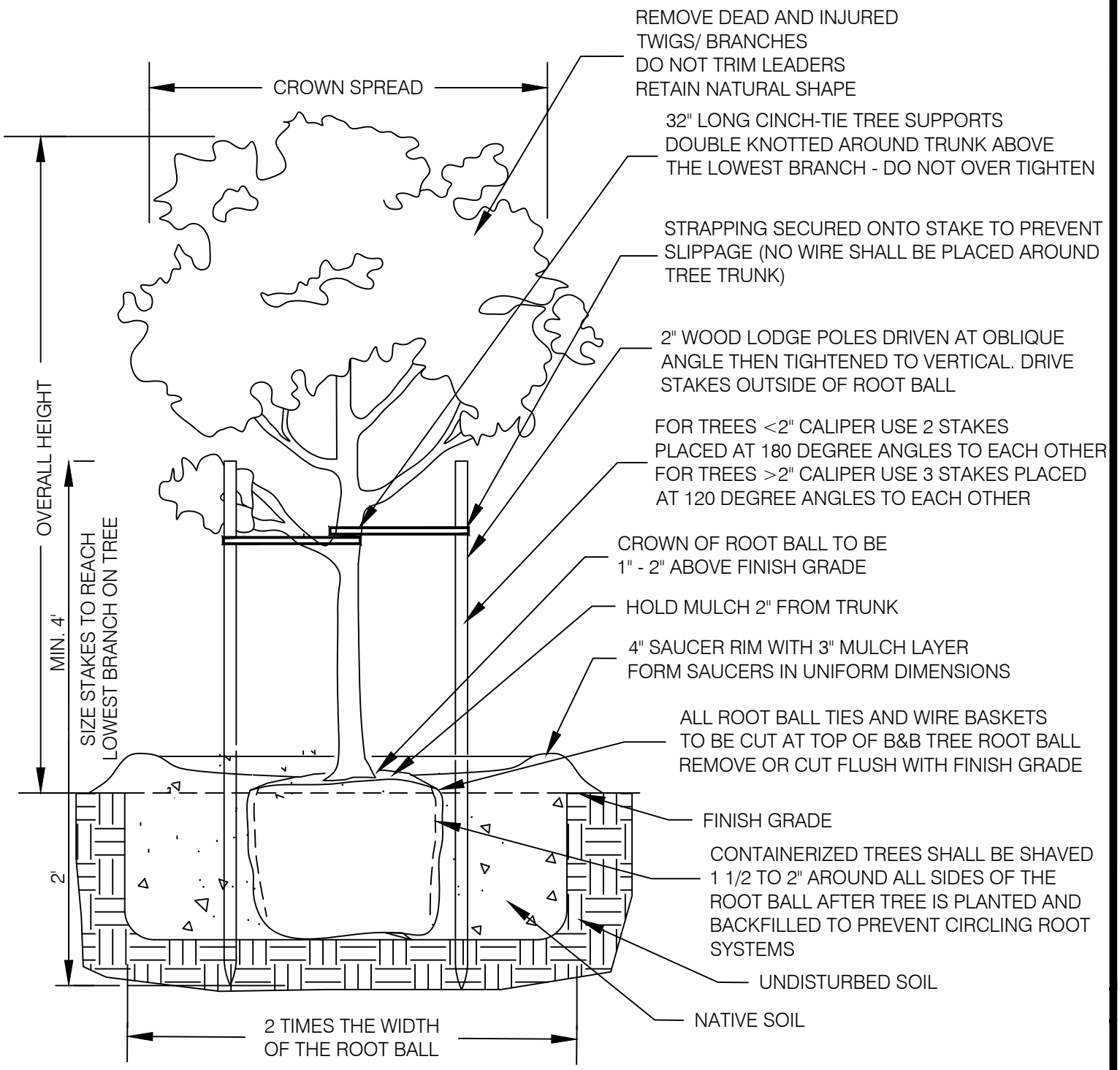

PINELLAS COUNTY

TREE PLANTING DETAIL

DETAIL INDEX I.D.: 1110

DATE: FEB/2022

NOTES:

1. NO TREE SHALL BE REMOVED UNLESS SPECIFICALLY TAGGED FOR REMOVAL BY THE ENGINEER.
2. THE CONTRACTOR SHALL TAKE SPECIAL CARE NOT TO DAMAGE TREES THAT ARE TO REMAIN.
3. CRITICAL ROOT ZONE (CRZ) TO BE DEFINED AS A RADIUS 3X THE DIAMETER (DBH) OF THE TREE. ANY ROOT CUTTING OR DAMAGE IN THIS ZONE MAY REDUCE STABILITY OF THE TREE. ANY ROOT CUTS WITHIN 1.5X THE DIAMETER (DBH) MAY RESULT IN A SEVERE LOSS OF STABILITY AND MUST BE REVIEWED BY COUNTY ARBORIST.
4. TREE PROTECTION ZONES (TPZ) TO BE DEFINED AS A RADIUS (DISTANCE FROM TRUNK TO THE TPZ FENCING) OF 12X THE DIAMETER AT BREAST HEIGHT (DBH) FOR TREES GREATER THAN OR EQUAL TO 10" DBH TREE OR
   a. 1 FT FOR 1-INCH DBH GREATER THAN EQUAL TO 10 INCHES
   b. 1.5FT FOR INCH LESS THAN 10 INCHES
5. ROOTS WITHIN THE TPZ AND GREATER THAN 1-INCH DIAMETER SHALL BE CLEANLY CUT WITH LOPPERS, HAND SAW OR SMALL CHAINSAWS.
6. ALL ROOT PRUNING SHALL BE PERFORMED BY AN ISA CERTIFIED ARBORIST IN ACCORDANCE WITH ANSI-A300 STANDARDS.
7. STOCKPILED MATERIALS OR UNNECESSARY VEHICULAR TRAFFIC SHALL NOT BE ALLOWED OVER ANY TREE ROOTS SYSTEM.
8. IF CONSTRUCTION ACTIVITIES MUST TAKE PLACE WITHIN THE TPZ, USE TRUNK/ROOT FLARE AND SOIL/ROOT PROTECTION MEASURES AS ILLUSTRATED ANSI A300 PART 5 BMP
9. TREE PROTECTION ZONES MAY BE MODIFIED TO ACCOMMODATE WORK WITHIN REASON. FOR EVERY 1 FT REDUCTION ON ONE SIDE OF THE PROTECTION AREA AND INCREASE IN 1 FT ON THE OPPOSITE SIDE MUST OCCUR.
10. TREE FENCING BARRIERS TO ESTABLISH TPZ'S SHALL BE CONSTRUCTED WHEN CALLED FOR ON THE PLANS OR AS DIRECTED BY THE ENGINEER
11. ACCEPTABLE TREE FENCING INCLUDES THE FOLLOWING
    a. A MINIMUM FOUR-FOOT (4') BARRIER, CONSTRUCTED IN A POST AND RAIL CONFIGURATION. A 2-INCH X 4-INCH POST AND A DOUBLE 1-INCH X 4-INCH RAIL ARE RECOMMENDED.
    b. FOUR-FOOT ORANGE POLYETHYLENE LAMINAR SAFETY FENCING.
    c. SIX-FOOT CHAIN LINK FENCING. A SIX-FOOT CHAIN LINK FENCE SHOULD BE REQUIRED FOR THE PROTECTION OF ALL SPECIMEN TREES.
    d. *ANY DEVIATION FROM THE THREE ACCEPTABLE TREE FENCING METHODS LISTED ABOVE SHOULD BE AUTHORIZED BY THE ENGINEER.
12. BARRIERS SHALL BE MAINTAINED IN PLACE UNTIL REMOVAL IS DIRECTED BY THE ENGINEER
13. COST OF ALL TREE BARRICADES SHALL BE INCLUDED IN PAY ITEM 110-0100 (CLEARING & GRUBBING).
14. SUBSTITUTION OF ACCEPTABLE TREE FENCING MATERIALS REQUIRE PRE-APPROVAL BY THE COUNTY.
15. CALL 811 BEFORE YOU DIG.

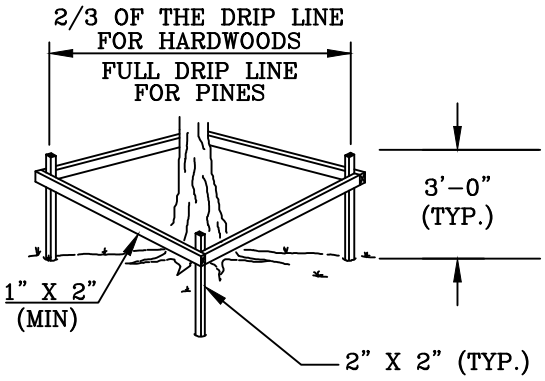

BARRIER

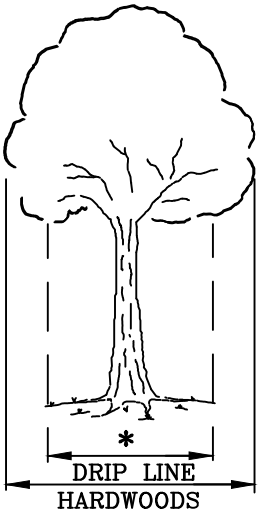

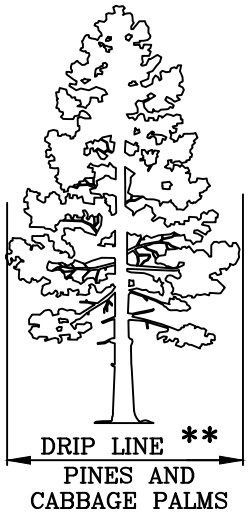

REQUIRED DISTANCES FROM TREE TRUNK

* 2/3 THE DRIP LINE OR 6 FEET, WHICHEVER IS GREATER.

**DRIP LINE FOR PINES/CONIFERS AND CABBAGE PALMS OR 6 FEET, WHICHEVER IS GREATER.

PINELLAS COUNTY

TREE PROTECTION

DETAIL INDEX I.D.: 1111

DATE: FEB/2022

NOTES:

1. THIS COVER IS NOT TO BE USED FOR SANITARY SEWER MANHOLES.
2. THIS COVER MAY BE USED WITH FRAME TYPE I, II OR III AS DETAILED IN F.D.O.T. INDEX No. 425-001. TYPE I SHALL BE USED UNLESS OTHERWISE SPECIFIED IN THE PLANS.
3. MATERIALS AND FABRICATION SHALL CONFORM TO SECTION 425 OF THE FLORIDA DEPARTMENT OF TRANSPORTATION STANDARD SPECIFICATIONS FOR ROAD AND BRIDGE CONSTRUCTION.
4. COVERS FOR UNDERDRAIN INSPECTION BOXES SHALL BE LABELED UNDERDRAIN AND NOT STORM SEWER.

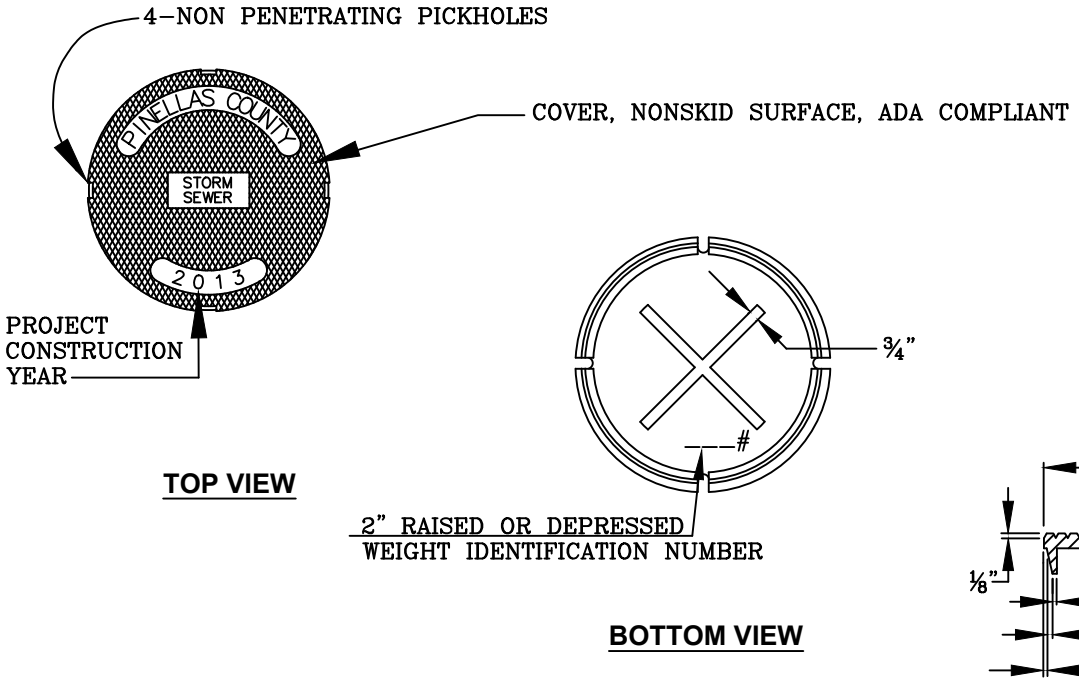

PINELLAS COUNTY

STORM SEWER COVER

DETAIL INDEX I.D.: 1250

DATE: FEB/2022

NOTES:
1. SECTIONS 'A'–'A' AND 'B'–'B' ARE ON SHEET 2 OF 4.
2. SECTIONS 'C'–'C', 'D'–'D', AND 'E'–'E' ON THIS SHEET SHOW TRANSITION FOR PINELLAS COUNTY TYPE 'A' CURB AND GUTTER (PC INDEX 1305).
3. TRANSITION FOR TYPE 'F' CURB IS ON SHEET 4 OF 4.
4. SECTION 'F'–'F' IS ON SHEET 3 OF 4.
5. RC–4 IS SYMMETRICAL ABOUT THE CENTERLINE.
6. RC–5 IS CONSTRUCTED WITHOUT WINGS.

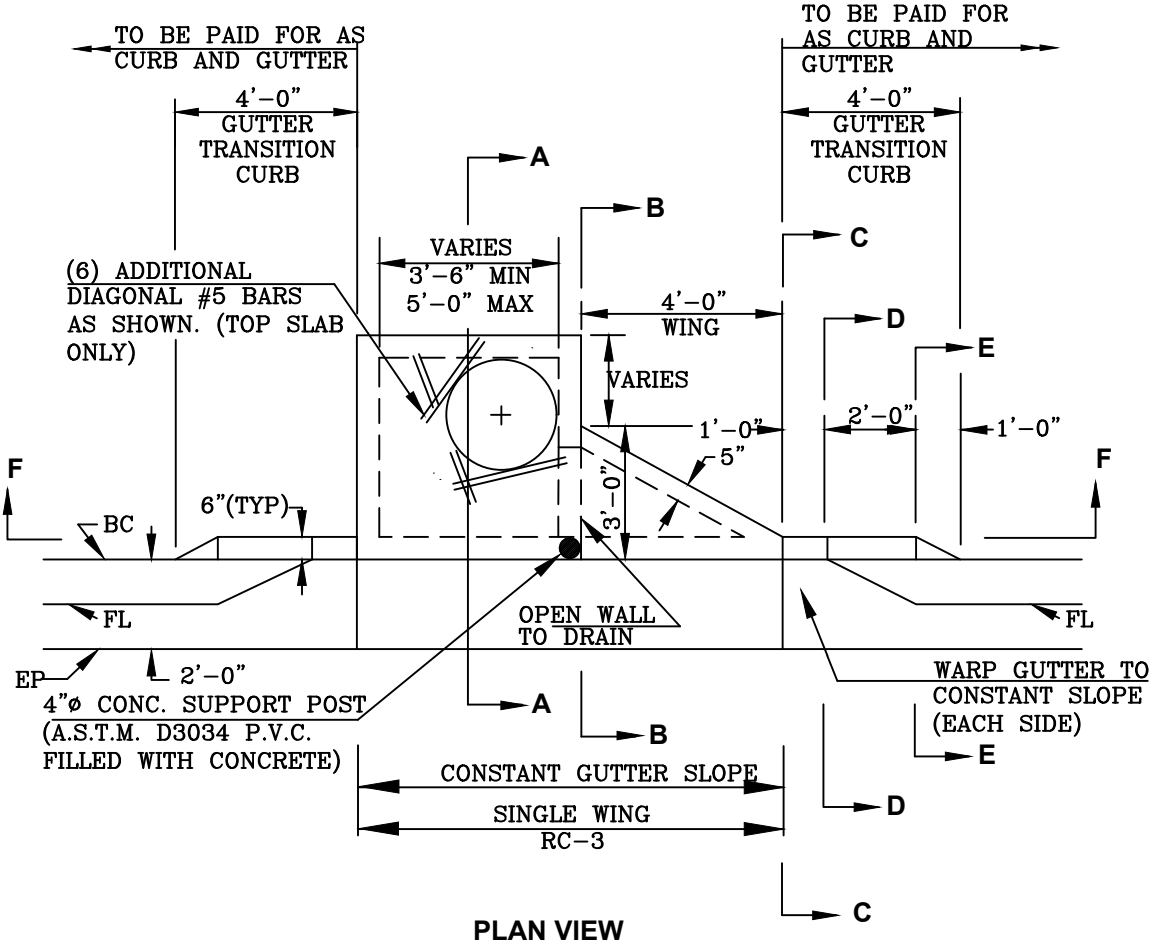

PLAN VIEW
NTS

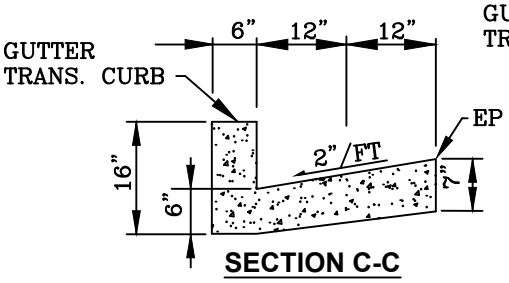

SECTION C-C

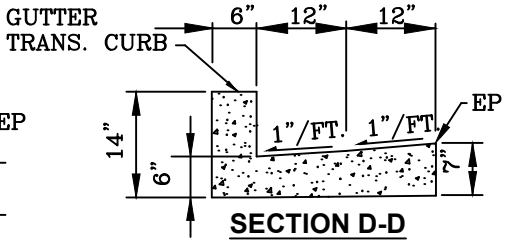

SECTION D-D

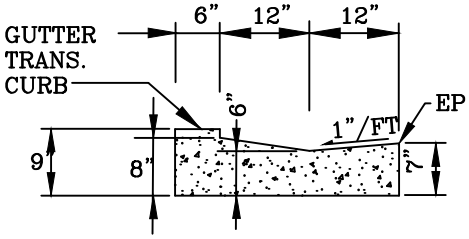

SECTION E-E

PINELLAS COUNTY

P.C.E.D. CURB INLET (TYPES RC-3, 4, AND 5)
SHEET 1 OF 4

DETAIL INDEX I.D.: 1255-SHT. 1

DATE: FEB/2022

NOTES:
1. RC-4 IS SYMMETRICAL ABOUT THE CENTERLINE.
2. RC-5 IS CONSTRUCTED WITHOUT WINGS.

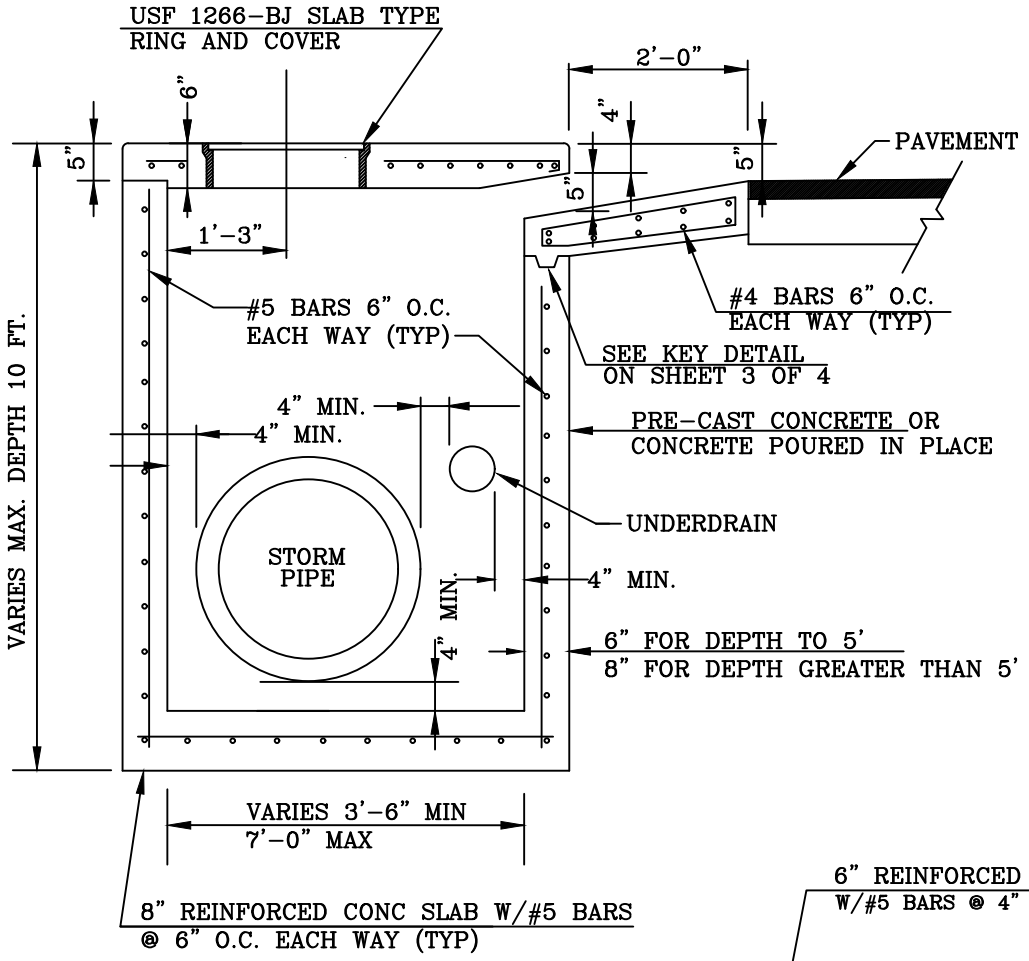

SECTION A-A
NTS

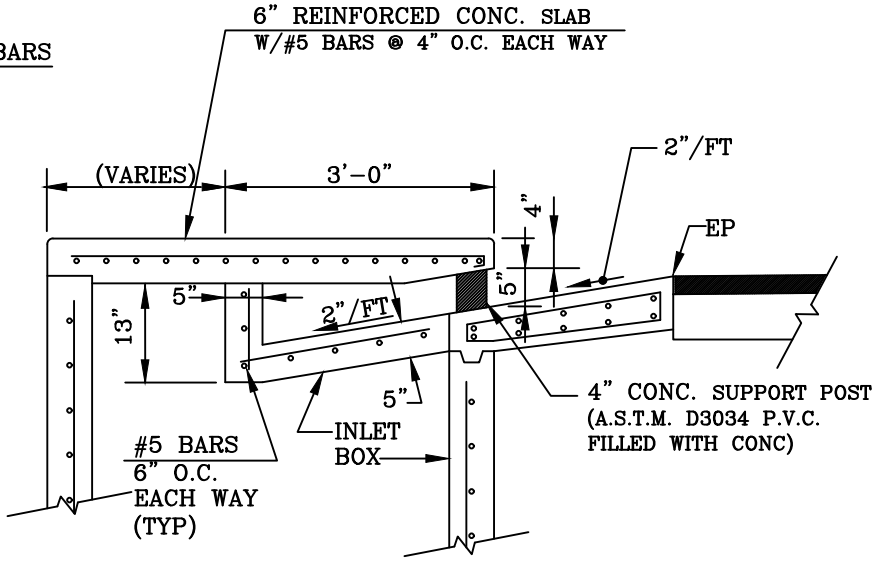

SECTION B-B
(VIEW THROUGH INLET BOX AND WING TRANSITION)

PINELLAS COUNTY

P.C.E.D. CURB INLET (TYPES RC-3, 4, AND 5)
SHEET 2 OF 4

DETAIL INDEX I.D.: 1255-SHT. 2
DATE: FEB/2022

NOTES:
1. RC-4 IS SYMMETRICAL ABOUT THE CENTERLINE.
2. RC-5 IS CONSTRUCTED WITHOUT WINGS.

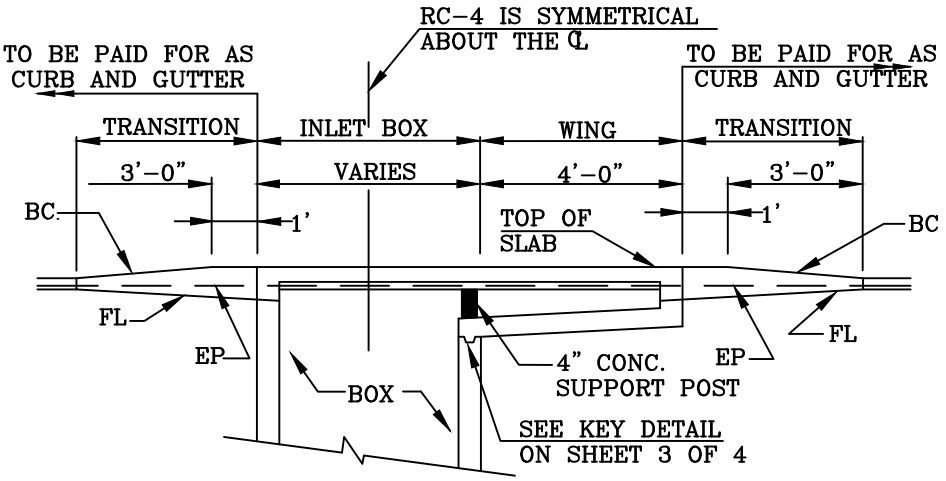

SECTION F-F
NTS

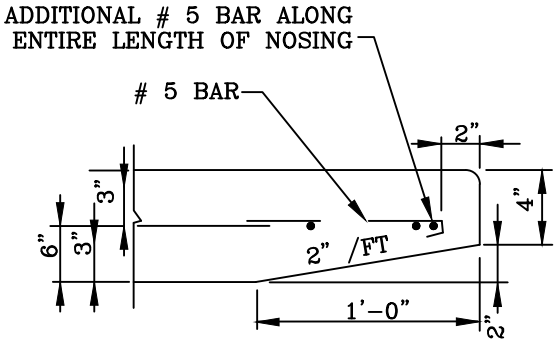

NOSING DETAIL
NTS

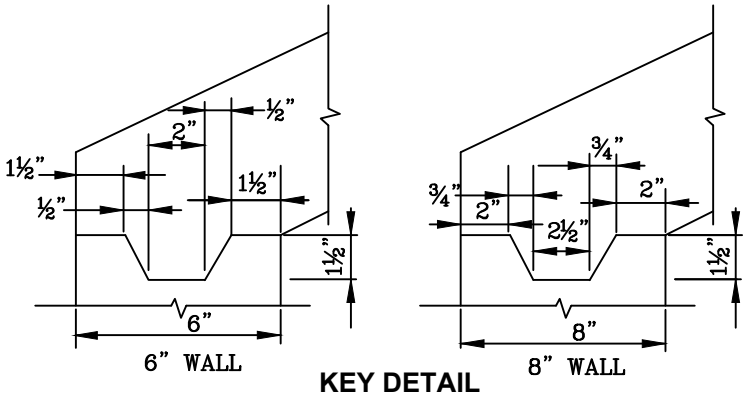

KEY DETAIL
NTS

PINELLAS COUNTY

P.C.E.D. CURB INLET (TYPES RC-3, 4, AND 5)
SHEET 3 OF 4

DETAIL INDEX I.D.: 1255-SHT 3

DATE: FEB/2022

NOTES:

1. THESE INLETS FOR USE WITH PINELLAS COUNTY TYPE 'A' AND WITH F.D.O.T. TYPE 'F' CURB AND GUTTER (FOR USE WITH TYPE 'F', SEE DETAILS FOR TYPE 'F' CURB TRANSITION).
2. COVER FOR ALL REINFORCING STEEL SHALL BE 2" MINIMUM.
3. SUGGESTED MAXIMUM INLET DESIGN FLOWS FOR 0.4% PROFILE GRADE AND 1/4"/FT. CROSS SLOPE.
   RC-3: 4.5 CFS (3'-6" WIDTH) / 5.5 CFS (5'-0" WIDTH)
   RC-4: 6.5 CFS (3'-6" WIDTH) / 7.5 CFS (5'-0" WIDTH)
   RC-5: 3 CFS (3'-6" WIDTH) / 4 CFS (5'-0" WIDTH)
4. INLETS SHALL BE CONSTRUCTED OF REINFORCED CONCRETE, AND MAY BE EITHER PRECAST OR POURED IN PLACE.
5. CONCRETE SHALL BE CLASS II, WITH Fc' = 3400 PSI (MIN.).
6. REINFORCING STEEL SHALL BE GRADE 60, DEFORMED, AND SHALL CONFORM TO THE REQUIREMENTS OF ASTM SPECIFICATION A 615 (GRADE 60 TOP SLAB.)
7. WHEN INLET TOPS EXTEND INTO SIDEWALK OR OTHER PAVED AREAS, THE FINISHED SURFACE OF THE INLET TOPS SHALL CONFORM TO THE FINISHED GRADE AND CROSS SLOPE OF THE ADJACENT SIDEWALK OR PAVEMENT. TO ACHIEVE THIS CONFORMITY THE DEPTH OF THE INLET SLAB MAY BE INCREASED WHERE NECESSARY, AND/OR THE HEIGHT OF THE INLET SIDE AND REAR WALLS MAY BE INCREASED OR DECREASED AS REQUIRED. HOWEVER, THE THICKNESS OF THE INLET SLAB AT ANY POINT SHALL NOT BE LESS THAN THAT SHOWN IN THE PLANS, AND NO ADJUSTMENT SHALL BE MADE TO THE DEPTH OF INLET OPENINGS OR THE HEIGHT OF THE TOP FRONT EDGE OF THE INLET SLAB.
8. UNLESS OTHERWISE NOTED, ALL EXPOSED EDGES AND CORNERS OF CONCRETE SHALL HAVE A 3/4" CHAMFER.
9. F.D.O.T. TYPE 'J' BOTTOM MAY BE USED WITH 'RC-3', 'RC-4' AND 'RC-5' INLETS. IN SUCH CASES THE STRUCTURE BOTTOM MAY BE ROTATED AS DIRECTED BY ENGINEER IN ORDER TO FACILITATE CONNECTIONS BETWEEN THE STRUCTURE WALLS AND STORM SEWER PIPES.
10. INLET SHOWN IS TYPE 'RC-3' (SINGLE WING). TYPE 'RC-4' (DOUBLE WING) IS THE SAME AS 'RC-3', EXCEPT THAT IT IS SYMMETRICAL ABOUT CENTERLINE OF BOX, AND RC-5 IS THE SAME, EXCEPT THAT IT IS CONSTRUCTED WITHOUT WINGS.
11. SECTIONS 'C'-'C' AND 'D'-'D' ON THIS SHEET SHOW TRANSITION FOR TYPE 'F' CURB.

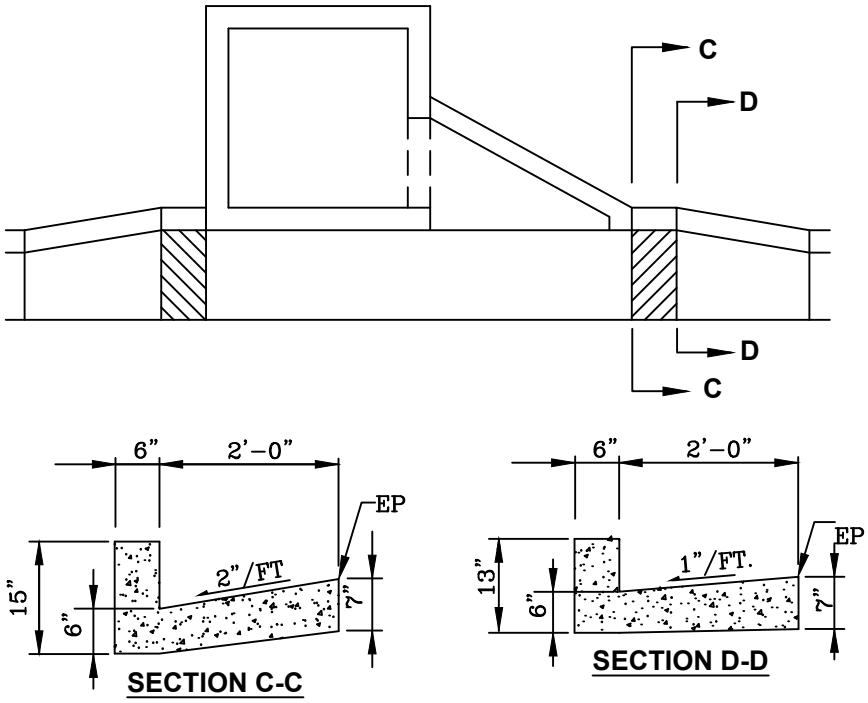

PINELLAS COUNTY

P.C.E.D. CURB INLET (TYPES RC-3, 4, AND 5)
SHEET 4 OF 4

DETAIL INDEX I.D.: 1255-SHT. 4

DATE: FEB/2022

NOTES:

1. COVER FOR ALL REINFORCING STEEL SHALL BE 2" MINIMUM.
2. INLETS SHALL BE CONSTRUCTED OF REINFORCED CONCRETE, AND MAY BE EITHER PRECAST OR POURED IN PLACE.
3. CONCRETE SHALL BE CLASS II, WITH Fc'=3400 PSI (MIN). CONCRETE SHALL BE IN ACCORDANCE WITH SECTION 346 OF F.D.O.T'S STANDARD SPECIFICATIONS FOR ROAD AND BRIDGE CONSTRUCTION.
4. REINFORCING STEEL SHALL BE GRADE 60, DEFORMED, AND SHALL CONFORM TO THE REQUIREMENTS OF ASTM SPECIFICATION A 615.
5. UNLESS OTHERWISE NOTED, ALL EXPOSED EDGES AND CORNERS OF CONCRETE SHALL HAVE A ¾" CHAMBER.

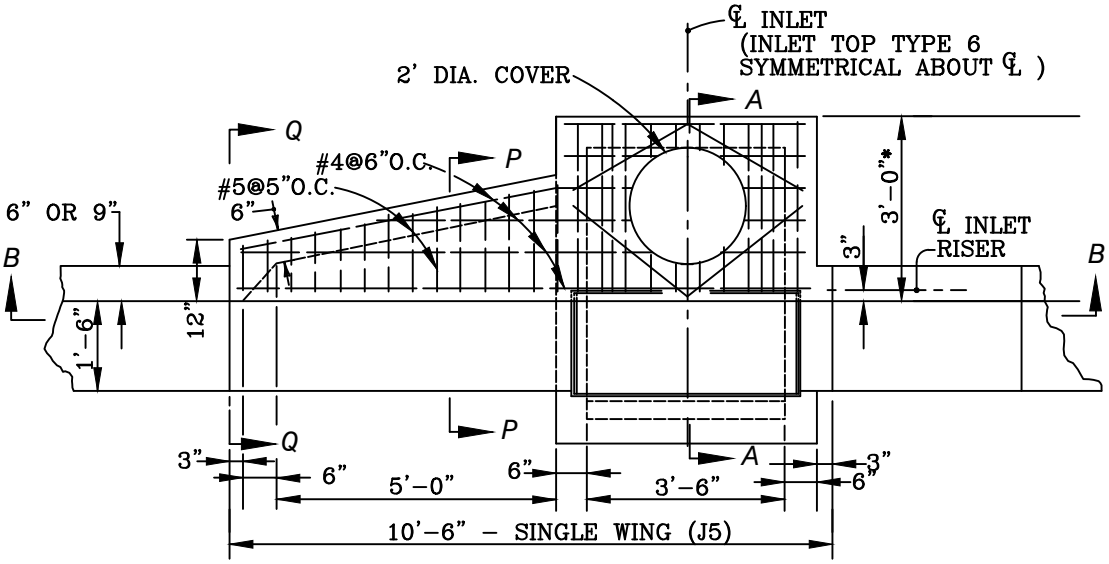

TOP VIEW
NTS

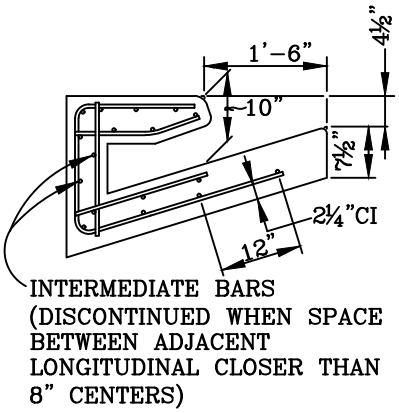

SECTION P-P
NTS

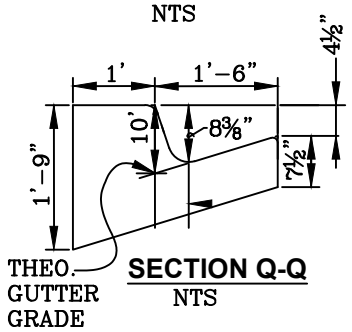

SECTION Q-Q
NTS

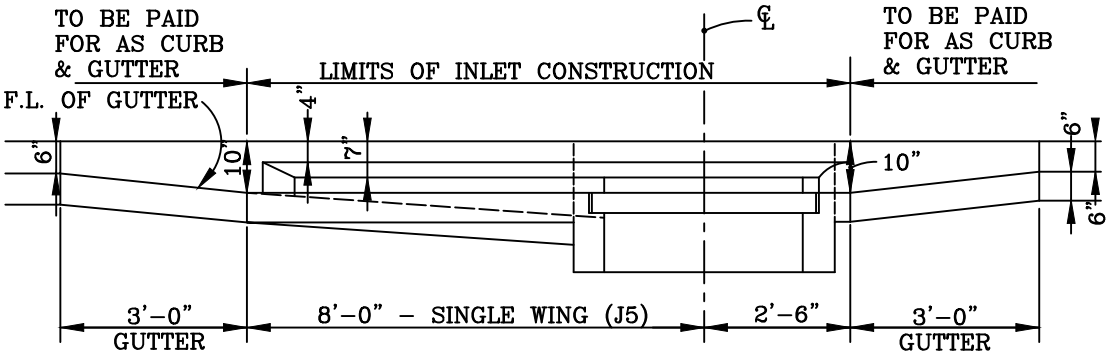

SECTION B-B
NTS

(CURB INLET TOP TYPE J6 IS SYMMETRICAL ABOUT THE CENTER LINE)

PINELLAS COUNTY

P.C.E.D. J5 & J6 CURB INLETS - SHEET 1 OF 2
(MODIFIED F.D.O.T. J5 & J6 CURB INLETS)

DETAIL INDEX I.D.:	1260 SHT. 1
DATE:	FEB/2022

NOTES:
1. MANHOLE COVER & FRAME TO BE F.D.O.T. INDEX No. 425-001, TYPE III.
2. CONTRACTOR TO SUBMIT SHOP DRAWING TO THE ENGINEER FOR APPROVAL PRIOR TO CONSTRUCTION.
3. J5 DESIGNATES A SINGLE WING INLET.
4. J6 DESIGNATES A DOUBLE WING INLET.

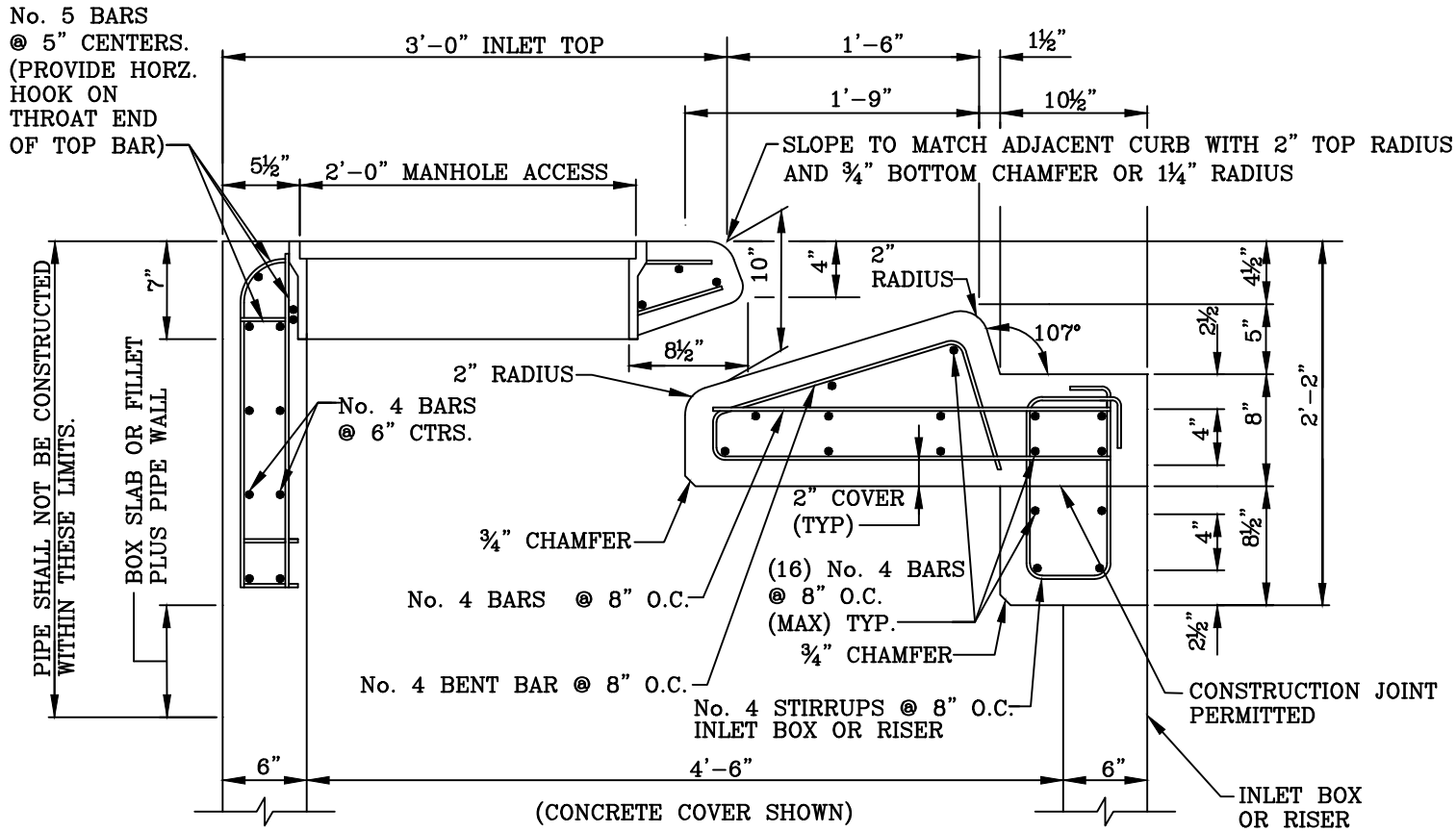

INLET TOP:
No. 4 TOP BARS @ 6" O.C.
No. 4 BOTTOM BARS @ 6" O.C.

SECTION A-A
N.T.S.

PINELLAS COUNTY

P.C.E.D. J5 & J6 CURB INLETS- SHEET 2 0F 2
(MODIFIED F.D.O.T. J5 & J6 CURB INLETS)

DETAIL INDEX I.D.: 1260-SHT.2
DATE: FEB/2022

NOTES:
1. GROUT TO CONSIST OF 3:1 SAND-CEMENT MIXTURE OR ANY CLASS CONCRETE.
2. FOR ALL STRUCTURES, UNLESS EXCLUDED BY SPECIAL DETAIL, BRICKS SHALL NOT BE USED IN THIS AREA, UNLESS THEY ARE COVERED WITH 4" THICK (MIN.) CONCRETE ABOVE THE BRICKS.

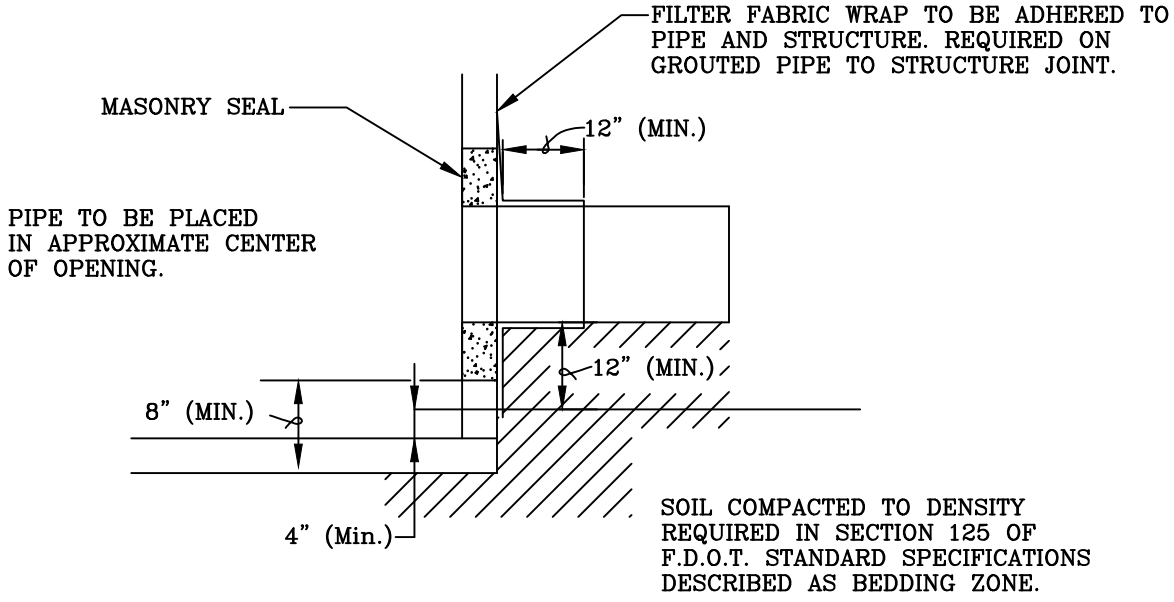

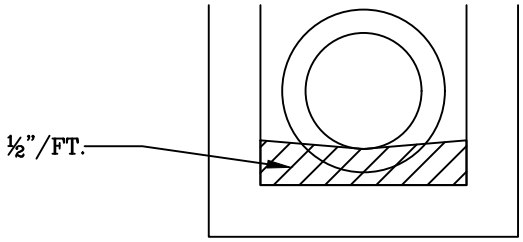

PINELLAS COUNTY

FILTER FABRIC WRAP AND GROUT AT STRUCTURES

DETAIL INDEX I.D.: 1265

DATE: FEB/2022

NOTES:

1. THIS ANTI-CLOGGING DEVICE SHALL ONLY BE USED ON ORIFICES THAT ARE ONE INCH OR LESS IN DIAMETER AND WHEN AN EXTERNAL SKIMMER IS PRESENT.
2. ALUMINUM STRAPS SHALL BE ANCHORED TO OUTFALL STRUCTURE WITH 1/4" x 2-3/4" HEX HEAD STAINLESS STEEL TAPCON® CONCRETE SCREWS (OR APPROVED EQUIVALENT). A MINIMUM OF 2 SCREWS PER STRAP IS REQUIRED.
3. TO PROVIDE SUFFICIENT FLOW CAPACITY, A MINIMUM CLEARANCE OF 1-INCH BETWEEN THE BOTTOM OF THE 6" SLOTTED PIPE AND THE SCOUR PAD IS REQUIRED.
4. CONTRACTOR SHALL CUT 3 SETS OF SLOTS SPACED EQUIDISTANT AROUND THE CIRCUMFERENCE OF THE 6" SLOTTED PVC PIPE. THE SLOTS SHALL BE 1/8" WIDE, 5" LONG, 2" APART, AND EXTEND THE ENTIRE LENGTH OF THE PIPE. SLOTS SHALL BE CUT ON A 45 DEGREE ANGLE. REFER TO DETAIL BELOW.
5. CONTRACTOR SHALL DRILL A HOLE 1/4" LARGER THAN THE ORIFICE INTO THE 6" SLOTTED PVC PIPE AND LINE UP THE PIPE HOLE WITH THE ORIFICE WHEN INSTALLING THE PIPE. THE PIPE HOLE SHALL BE LOCATED IN A SOLID SECTION OF PIPE BETWEEN TWO OF THE SETS OF THE 1/8" SLOTS.
6. CONCRETE PAD SHALL BE PRE-CAST AND EXTEND AT LEAST ONE FOOT BEYOND ALL SIDES OF SKIMMER. CONCRETE MINIMUM SPECS. ARE: 4" THICKNESS; 2500 PSI WITH #5 REBAR ON 1' CENTERS; TWO #5 REBARS SHALL BE LOCATED 4" FROM EDGE AND DOWELED INTO OUTFALL STRUCTURE. ENGINEER SHALL ASSESS SITE CONDITIONS AND OUTFALL STRUCTURE DESIGN TO STRENGTHEN PAD ACCORDINGLY.

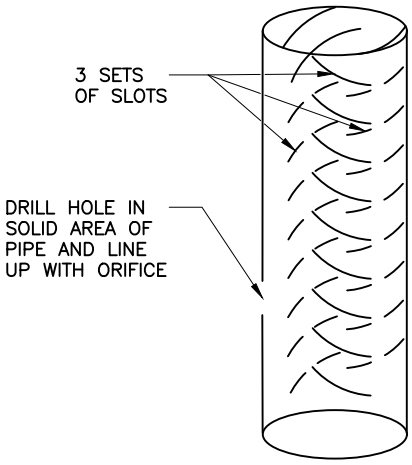

MODIFIED 6" SLOTTED PVC PIPE DETAIL

N.T.S.

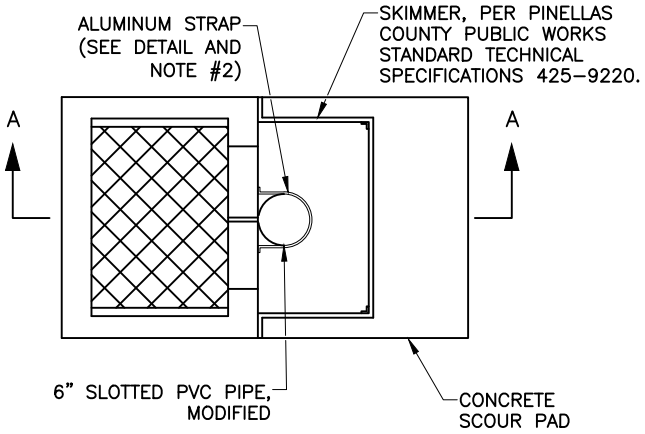

PLAN VIEW

N.T.S.

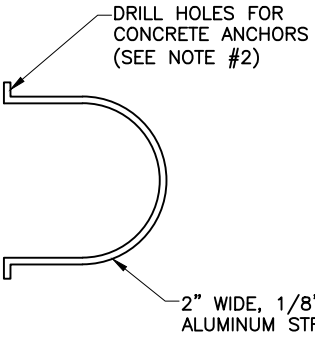

ALUMINUM STRAP DETAIL

N.T.S.

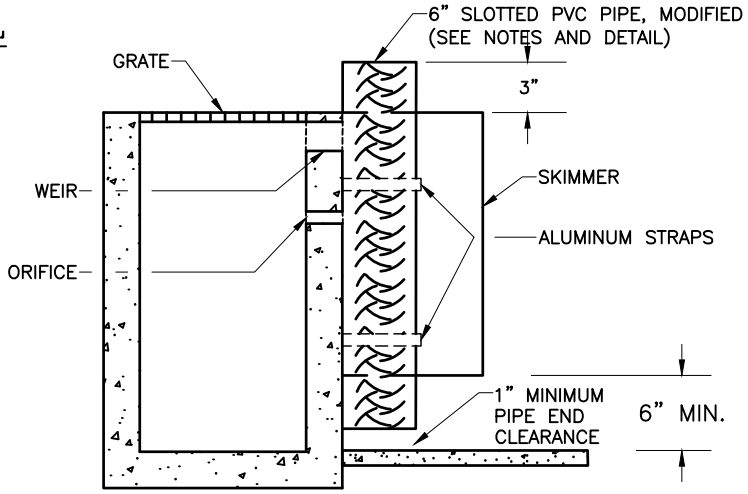

SECTION A-A

N.T.S.

PINELLAS COUNTY

ANTI-CLOGGING DEVICE FOR POND OUTFALL CONTROL STRUCTURES

DETAIL INDEX I.D.: 1270

DATE: FEB/2022

NOTES:
1. THIS MANHOLE SHALL BE CONSTRUCTED OF PRECAST CONCRETE.
2. CONSTRUCTION METHODS AND MATERIALS SHALL CONFORM TO SECTION 425 OF THE FLORIDA DEPARTMENT OF TRANSPORTATION STANDARD SPECIFICATIONS FOR ROAD AND BRIDGE CONSTRUCTION.
3. NO INVERTS SHALL BE POURED.
4. 2" CLEARANCE COVER FOR REINFORCING STEEL.
5. OPENING AROUND UNDERDRAIN PIPE SHALL BE GROUT-FILLED.

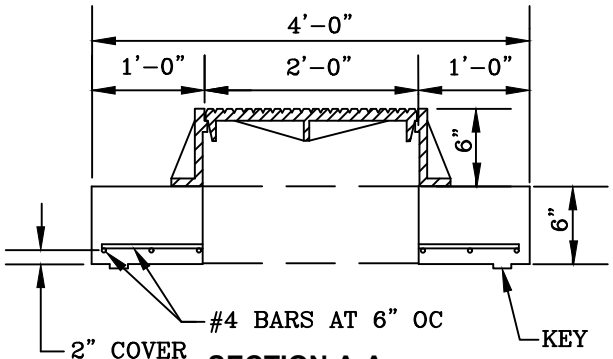

SECTION A-A
TOP SLAB

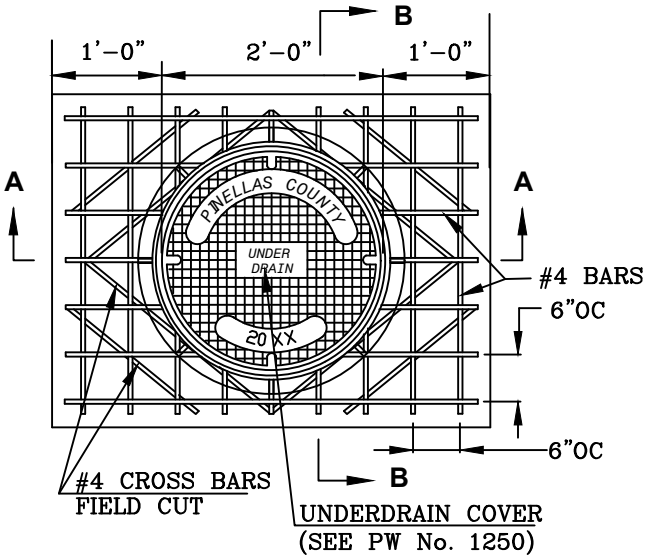

PLAN VIEW
TOP SLAB

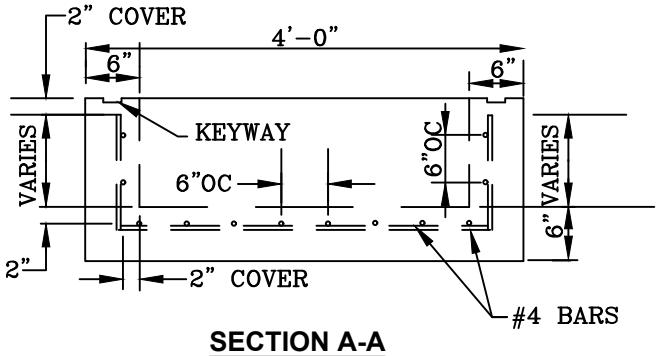

SECTION A-A
BOTTOM UNIT

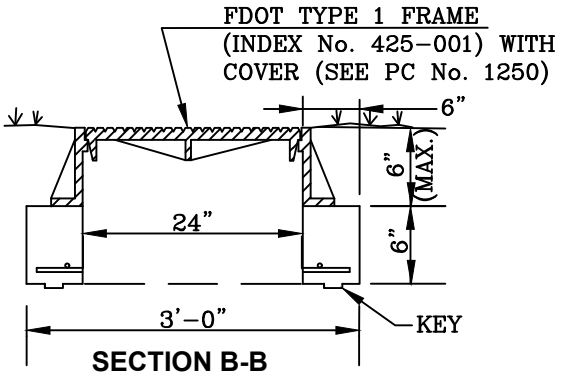

SECTION B-B
TOP SLAB

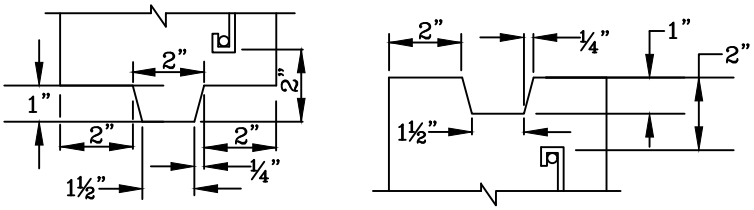

KEY DETAIL

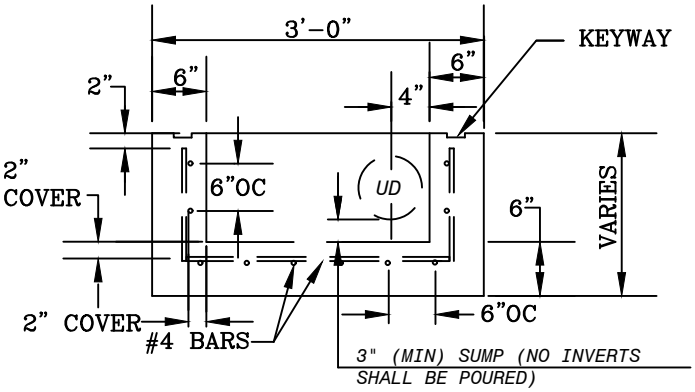

SECTION B-B
BOTTOM UNIT

PINELLAS COUNTY

UNDERDRAIN INSPECTION MANHOLE TYPE 1

DETAIL INDEX I.D.:	1281
DATE:	FEB/2022

NOTES:

1. CONSTRUCTION METHODS AND MATERIALS SHALL CONFORM TO SECTION 425 OF THE FLORIDA DEPARTMENT OF TRANSPORTATION STANDARD SPECIFICATION FOR ROAD AND BRIDGE CONSTRUCTION.
2. OPENING AROUND UNDERDRAIN PIPE SHALL BE GROUT-FILLED.
3. MANHOLE COVERS SHALL COMPLY WITH PC No. 1250.
4. WHEN AUTHORIZED BY THE ENGINEER AND AT NO ADDITIONAL EXPENSE TO THE COUNTY, F.D.O.T. INDEX No. 425-010 MANHOLE TYPE P (ALTERNATE A), MAY BE USED IN PLACE OF A COUNTY UNDERDRAIN INSPECTION MANHOLE.
5. EXCEPT AS OTHERWISE NOTED ON THE PLANS, FRAME FOR MANHOLE COVERS SHALL BE F.D.O.T. INDEX No. 425-001, TYPE I.
6. MINIMUM WALL THICKNESS: 4½" FOR PREFAB AND 6" FOR POURED IN PLACE.
7. FOR POURED IN PLACE CONSTRUCTION, DOWELS MAY BE USED IN LIEU OF JOINT KEY AND GROUTING. DOWELS SHALL EXTEND A MINIMUM OF 6" INTO ADJACENT SECTIONS.

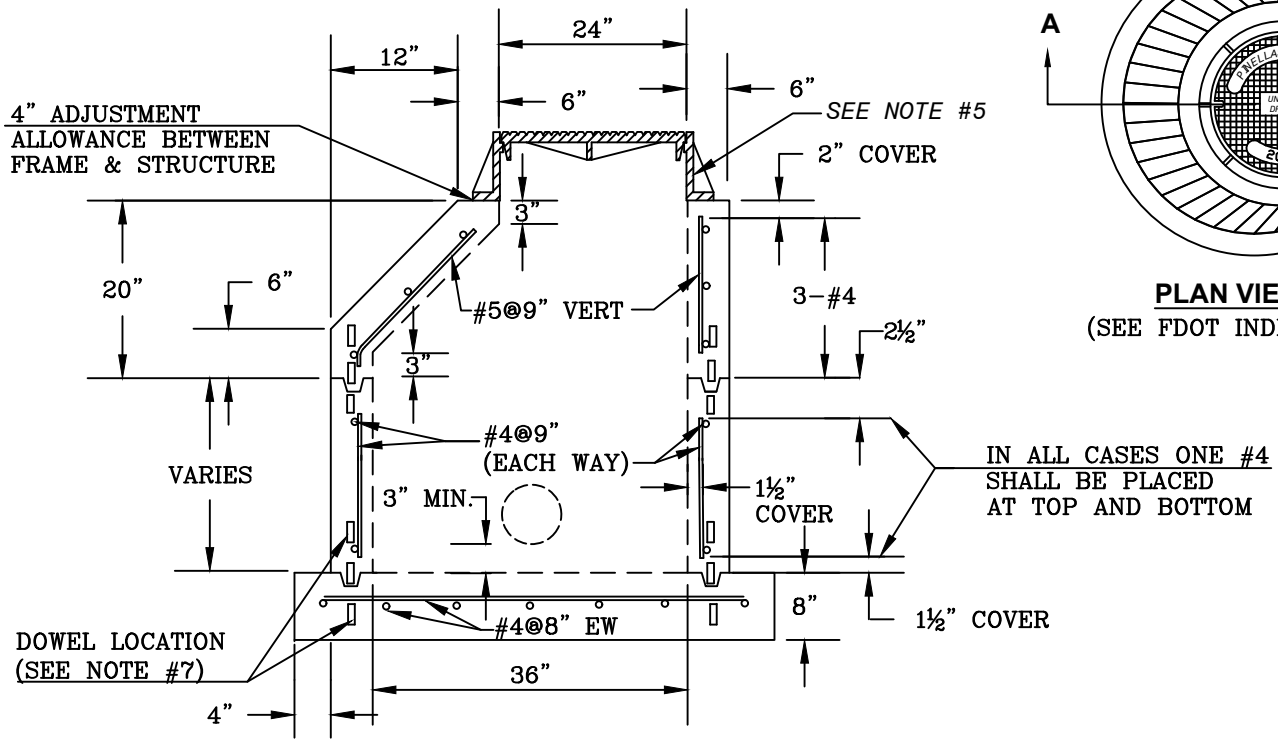

SECTION A-A

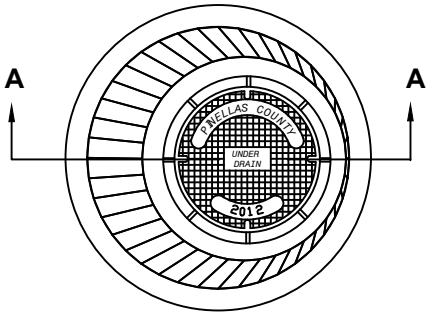

PLAN VIEW

(SEE FDOT INDEX No. 425-010)

JOINT DIMENSIONS

1. 1" PRIOR TO PLACEMENT OF UPPER SECTION
2. ½" MAXIMUM AFTER FINAL SETTLEMENT OF UPPER SECTION
3. 1½" WIDE (4½" WALL) 2" WIDE (6" WALL)

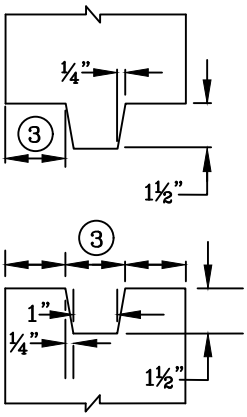

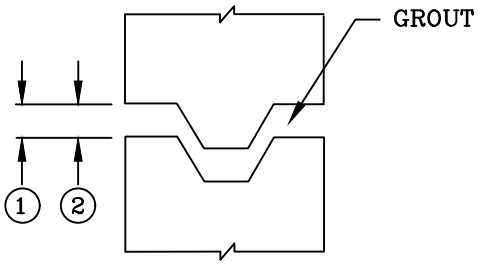

JOINT DETAIL

PINELLAS COUNTY

UNDERDRAIN INSPECTION MANHOLE TYPE 2

DETAIL INDEX I.D.: 1282

DATE: FEB/2022

NOTES:

1. ALL VALUES EXCEPT A.O.S. AND ELONGATION ARE MINIMUM AVERAGE ROLL VALUES IN THE WEAKEST PRINCIPAL DIRECTION. VALUES FOR A.O.S. AND ELONGATION ARE MAXIMUM AVERAGE ROLL VALUES.
2. FOR ADDITIONAL NOTES SEE F.D.O.T. STANDARD INDEX NO. 440-001.
3. PVC PIPE SHALL CONFORM TO EITHER ASTM F758 OR ASTM D3034, EXCEPT THAT THE PIPE AND ARRANGEMENT OF PERFORATIONS SHALL CONFORM TO THE PERFORATION DETAIL ON THIS SHEET.
4. AGGREGATE SHALL BE AS SPECIFIED IN THE F.D.O.T. STANDARD SPECIFICATIONS, SECTION 901, AND SHALL BE SIZE 57.
5. DIAMETER OF PERFORATIONS SHALL BE 3/16" TO 3/8".
6. MAXIMUM ALLOWABLE BEND SHALL BE 22½", WITH A STRAIGHT 2' MINIMUM PIPE SEPARATION BETWEEN BENDS.
7. DO NOT USE PERFORATED PVC PIPE OR AGGREGATE UNDERNEATH ROADWAYS.
8. SEE PLANS FOR EXACT DIMENSIONS. DIMENSIONS LESS THAN 24" REQUIRES COUNTY APPROVAL.

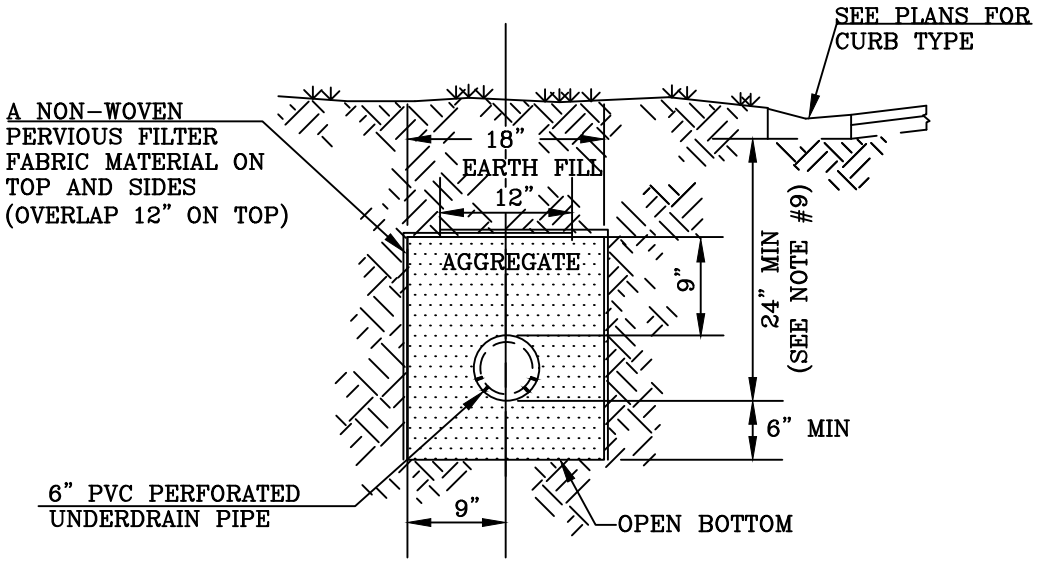

SECTION VIEW

STANDARD CRITERIA	UNIT	TEST METHOD	VALUE
Permittivity	sec^{-1}	ASTM-D-4491	0.2
A.O.S.	U.S. Sieve #	ASTM-D-4751	100+
Elongation	%	ASTM-D-4632	50
Grab Tensile Strength	N	ASTM-D-4632	1100
Sewn Strength	N	ASTM-D-4884	990
Puncture	N	ASTM-D-4833	400
Trapezoidal Tear	N	ASTM-D-4533	400
U.V. Resistance	AT 500 Hrs.	ASTM-D-4355	50%

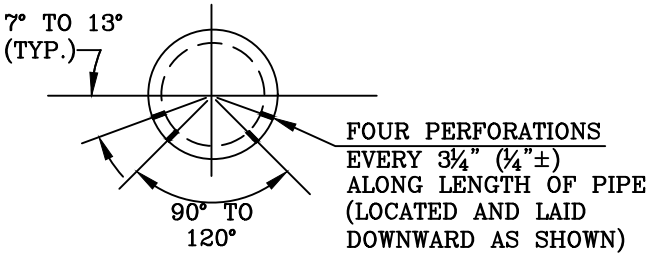

PERFORATION DETAIL

PINELLAS COUNTY

ROADSIDE UNDERDRAIN INSTALLATION

DETAIL INDEX I.D.: 1290

DATE: FEB/2022

NOTES:

1. MILLING AND RESURFACING LIMITS: 3'-0" FOR RESIDENTIAL ROADWAYS; 25'-0" FOR ALL OTHER TYPES OF ROADWAYS. MUST INCLUDE ENTIRE LANE WIDTH.
2. BACKFILL FOR TRENCH MUST BE PLACED IN 6" COMPACTED LAYERS TO 100% OF MAXIMUM DENSITY AS DETERMINED BY AASHTO T-99. (EXCAVATABLE FLOWABLE FILL OPTION IS SUBJECT TO COUNTY ENGINEER'S APPROVAL). TEST REPORTS ARE REQUIRED AND MUST BE SUBMITTED TO PINELLAS COUNTY.
3. BASE MATERIAL MUST BE LIME ROCK OR CRUSHED CONCRETE (MIN. LBR 100) AND MUST BE PLACED IN 6" COMPACTED LAYERS TO 98% OF MAXIMUM DENSITY AS DETERMINED BY AASHTO T-180 (MODIFIED) (TEST REPORTS ARE REQUIRED AND MUST BE SUBMITTED TO PINELLAS COUNTY) (12" MIN.).
4. AS AN ALTERNATIVE TO COMPACTED BASE AND IN WET AREAS, FULL-LIFT ASPHALTIC CONCRETE, FINE TRAFFIC LEVEL C TYPE 12.5, MUST BE PLACED IN 2" COMPACTED LAYERS WITH A MINIMUM THICKNESS EQUAL TO THE EXISTING BASE (6" MIN.).
5. ASPHALTIC CONCRETE PAVEMENT JOINTS MUST BE SAW-CUT AND ALL SURFACES TACK COATED.
6. ASPHALT SURFACE MUST BE CONSISTENT WITH EXISTING GRADE. IN ACCORDANCE WITH PINELLAS COUNTY SPECIFICATIONS, THE FOLLOWING ROADWAY CLASSIFICATION TYPE/THICKNESS ARE REQUIRED: ARTERIAL-3" MIN. TYPE SP-12.5 FINE TRAFFIC LEVEL "C"; COLLECTOR-2" MIN. TYPE SP-12.5 FINE TRAFFIC LEVEL "C"; RESIDENTIAL-1½" MIN. TYPE SP-9.5 TRAFFIC LEVEL "C" (TEST REPORTS ARE REQUIRED AND MUST BE SUBMITTED TO PINELLAS COUNTY).
7. OVERLAY OF CONSTRUCTION SCARS TO PAVEMENT AND TRENCH MUST BE REQUIRED AS DIRECTED BY THE COUNTY ENGINEER.
8. EXCAVATION MUST COMPLY WITH THE TRENCH SAFETY ACT REQUIREMENTS.
9. INSTALL DRY COMPACTABLE MATERIAL AROUND THE PIPE.
10. ALL MATERIAL, WORK AND TESTING MUST MEET PINELLAS COUNTY STANDARD SPECIFICATIONS.
11. CONTRACTOR MUST RESTORE PAVEMENT TO MATCH THE GRADES THAT EXISTED PRIOR TO CONSTRUCTION. ANY ADDITIONAL SURVEY NECESSARY TO ENSURE THAT THIS REQUIREMENT IS MET MUST BE PERFORMED AT THE CONTRACTOR'S EXPENSE.

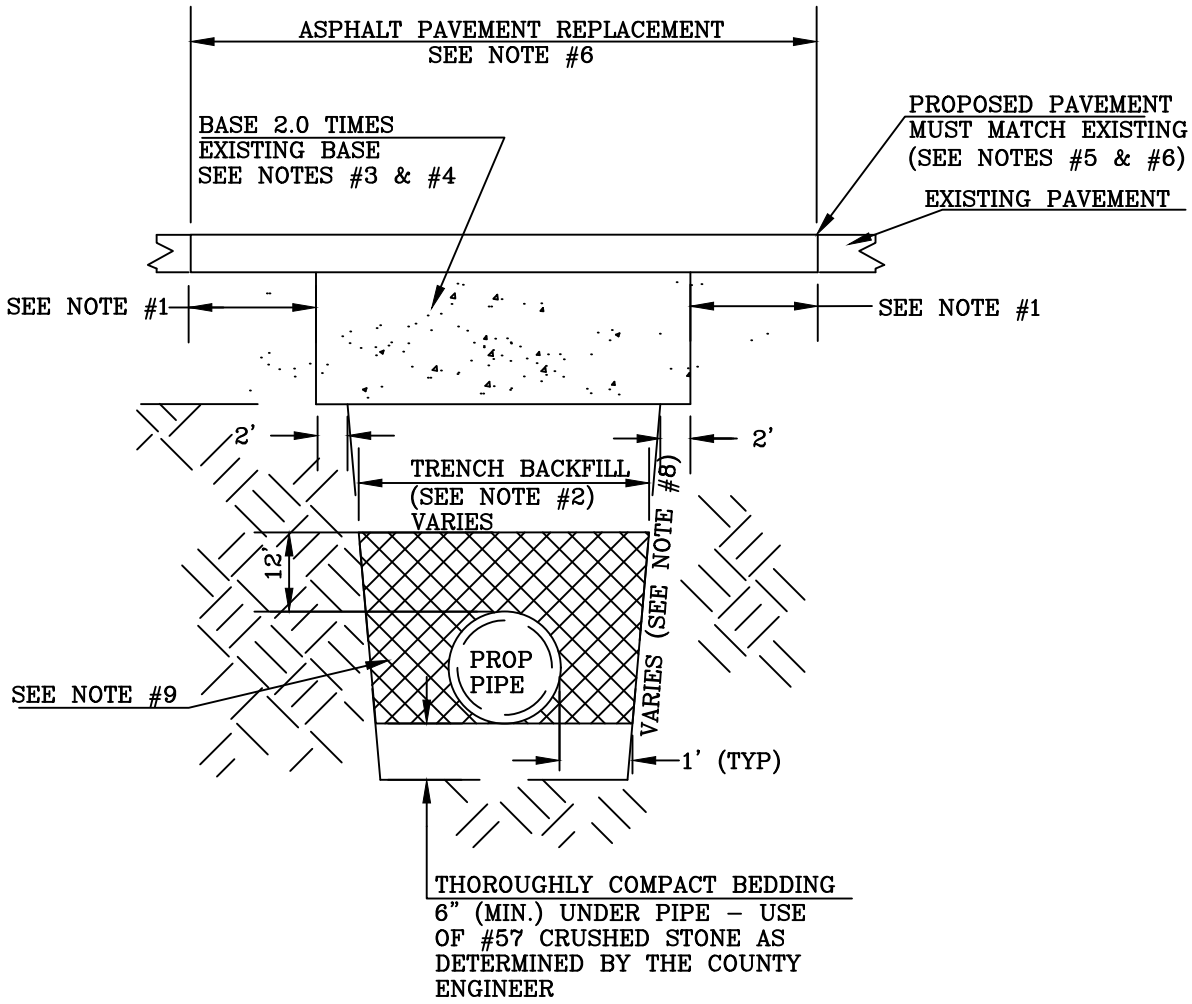

PINELLAS COUNTY

PAVEMENT CUTS, EXCAVATION AND RESTORATION

DETAIL INDEX I.D.: 1291

DATE: FEB/2022

NOTE:

1. ½" EXPANSION JOINT EVERY 500', BETWEEN CURB SECTIONS, AT RADII, END OF POUR AND STRUCTURES. (CONTRACTION JOINTS EVERY 10', LONGITUDINALLY. SEE SECTION 520 OF THE F.D.O.T. STANDARD SPECIFICATIONS.)
2. IF CURB IS BUILT IN CROSSWALK, DO NOT CONSTRUCT THE LIP PER FDOT STANDARD PLANS INDEX 522-002, PAVEMENT RELIEF DETAILS

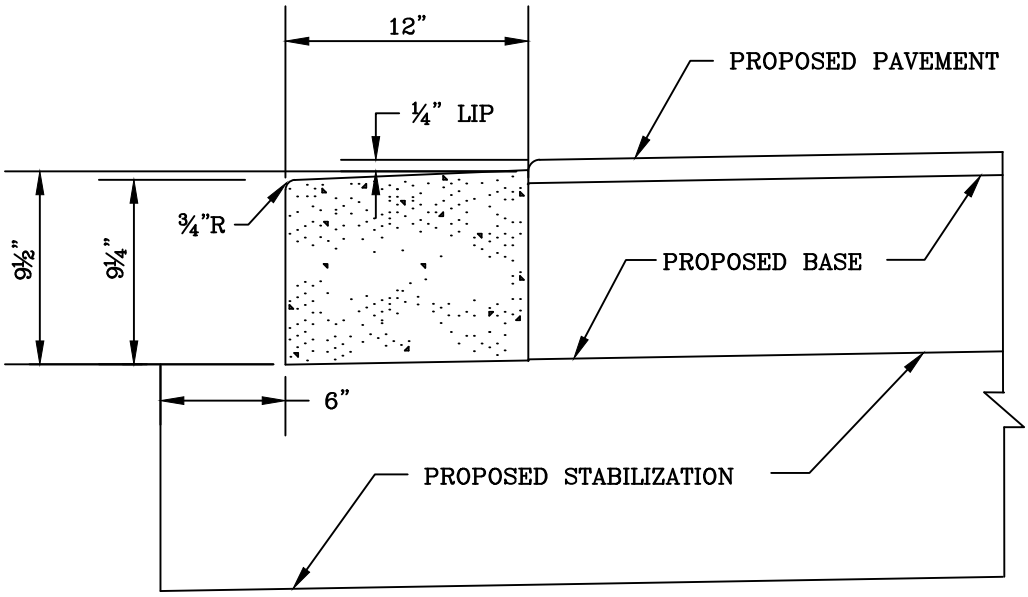

PROFILE VIEW OF HEADER CURB

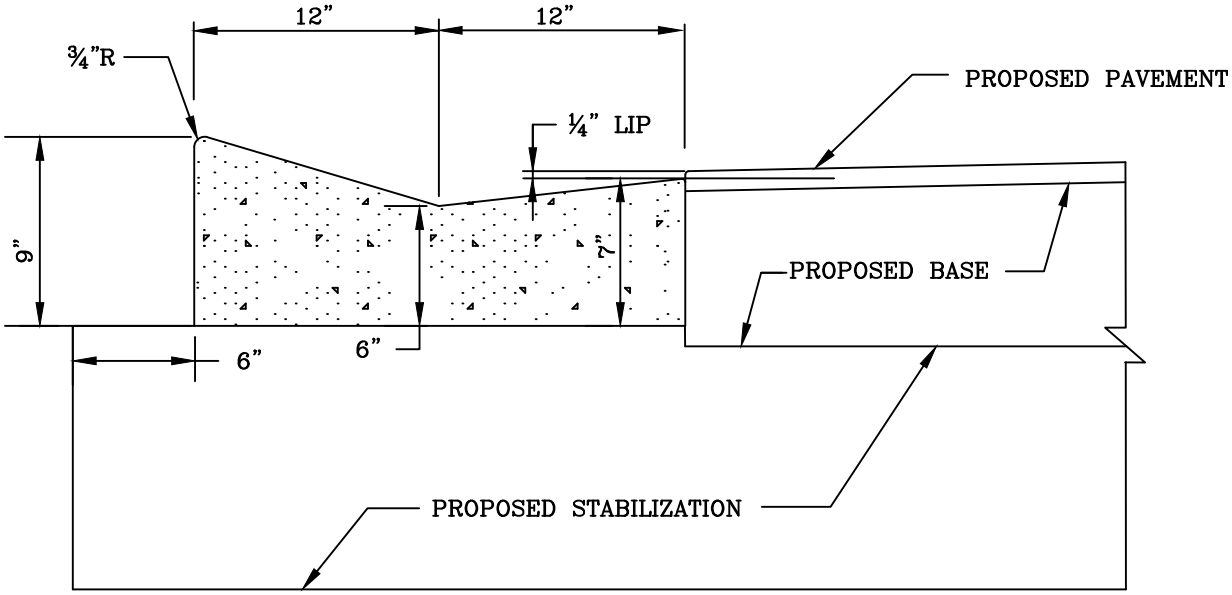

PROFILE VIEW OF TYPE A CURB & GUTTER

PINELLAS COUNTY	DETAIL INDEX I.D.: 1305
	DATE: FEB/2022
CURB AND GUTTER TYPE A AND HEADER CURB	

NOTES:

1. SURFACE OF PAVEMENT SHALL BE ¼" ABOVE LIP OF GUTTER.
2. INSTALL ½" EXPANSION JOINT AS SHOWN AND AT CENTERLINE OF SIDE STREET, WITH (SAWCUT) CONTRACTION JOINTS EVERY 10', LONGITUDINALLY. (SEE SECTION 520 OF THE F.D.O.T. STANDARD SPECIFICATIONS).

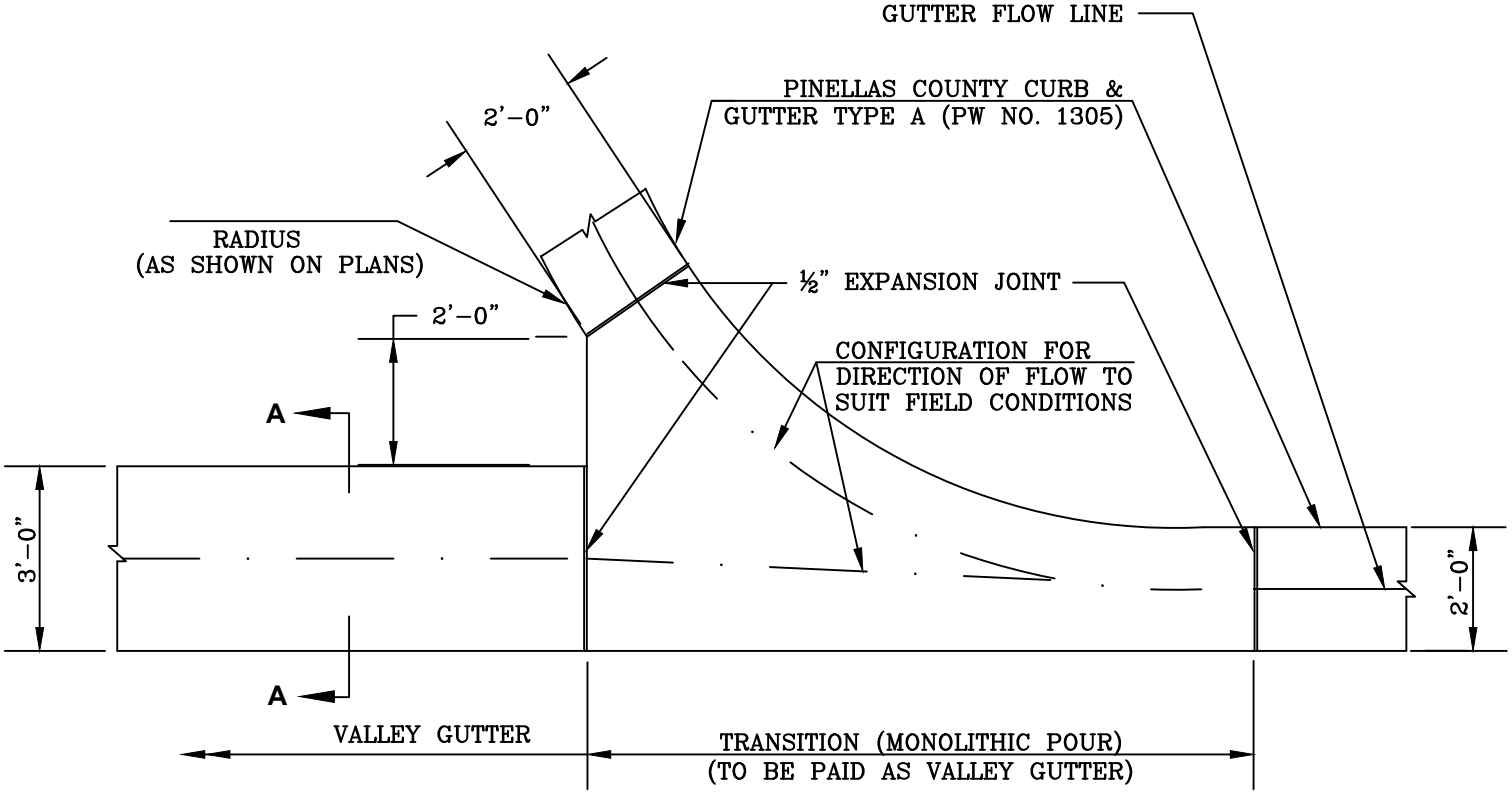

PLAN VIEW

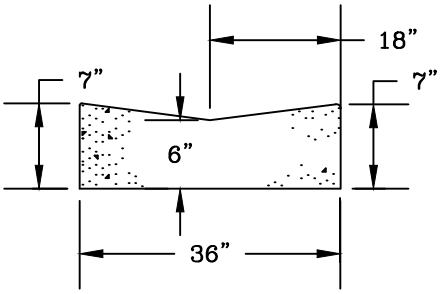

VALLEY GUTTER
SECTION A–A

PINELLAS COUNTY

VALLEY GUTTER AND TRANSITION

DETAIL INDEX I.D.: 1315

DATE: FEB/2022

NOTES:

1. CONCRETE DRIVEWAY APRONS AND SIDEWALK CROSSINGS SHALL BE CONSTRUCTED OF CONCRETE PAVEMENT (3000 PSI), 6" THICK REINFORCED WITH 6" X 6" #10/#10 WELDED WIRE FABRIC, (2" MINIMUM COVER FROM THE BOTTOM.)
2. FIBER REINFORCED CONCRETE 3000 PSI (MIN.) MAY BE USED IN PLACE OF THE REQUIREMENTS OF NO. 1 ABOVE.
3. CONSTRUCTION OF APRON/DRIVEWAY CROSS SLOPES AND SIDEWALK CROSS SLOPE THROUGH THE DRIVEWAY SHALL COMPLY WITH F.D.O.T. INDEX NO. 522-003 FOR ADA REQUIREMENTS.
4. REMOVE TREE ROOTS WITHIN 10" OF PROPOSED GRADE.
5. WHEN THERE IS EXISTING SIDEWALK CROSSING THE PROPOSED DRIVEWAY, IT MUST BE REMOVED TO THE NEAREST JOINT BEYOND THE DRIVEWAY.
6. SIDEWALKS ADJACENT TO LOT PROPERTY LINES SHALL NOT HAVE A CROSS SLOPE GREATER THAN 2% PER F.D.O.T. INDEX 522-001.
7. THERE SHOULD BE AT LEAST ONE LONGITUDINAL CONTROL JOINT AT THE CENTER LINE FOR ALL DRIVEWAYS UP TO 18-FT WIDE. LONGITUDINAL CONTROL JOINT SHOULD NOT EXCEED 8-FT ON ALL DRIVEWAYS WIDER THAN 18-FT. MATCH JOINTS IN CURB AND GUTTER TO JOINTS IN DRIVEWAYS.

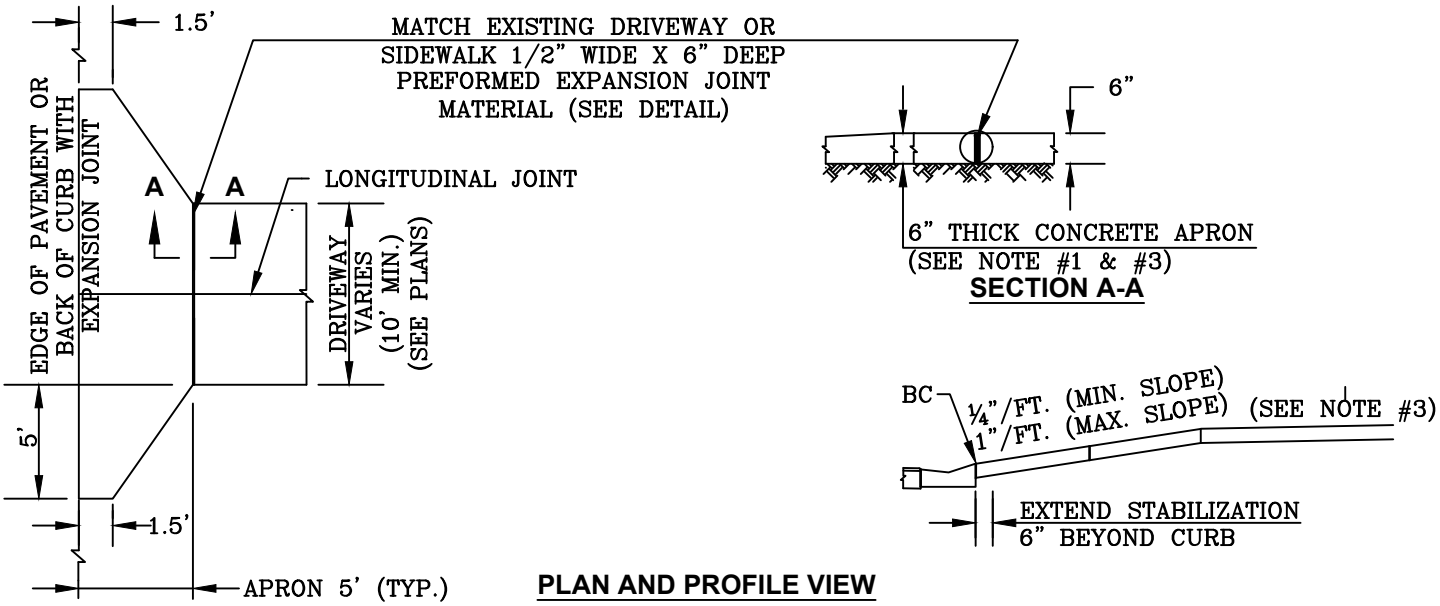

PLAN AND PROFILE VIEW

TYPE "A" CURB DRIVEWAY APRON

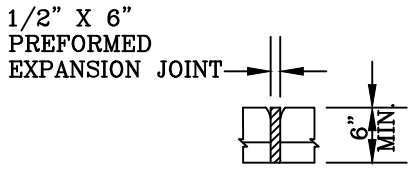

JOINT DETAIL

PINELLAS COUNTY

CONCRETE DRIVEWAY APRON

DETAIL INDEX I.D.: 1340

DATE: FEB/2022

NOTES:

1. INTERLOCKING PAVING UNITS SHALL GENERALLY BE INSTALLED IN ACCORDANCE WITH MANUFACTURER'S REQUIREMENTS.
2. MINIMUM PAVER THICKNESS: 2-3/8" (CONCRETE), 2-1/4" (CLAY BRICK).
3. CONCRETE PAVERS TO CONFORM TO ASTM C936. CLAY BRICK PAVERS TO CONFORM TO ASTM C902.
4. GRANULAR BASE SHALL BE IN ACCORDANCE WITH MANUFACTURER'S REQUIREMENTS (6" MIN.). GRANULAR BASE SHALL BE LIMEROCK (LBR 100) OR CRUSHED CONCRETE (GRADED AGGREGATE) COMPACTED TO AT LEAST 98% MODIFIED PROCTOR DENSITY (ASTM D1557 OR AASHTO T-180).
5. COLORING OR DYE SHALL BE UNIFORM THROUGHOUT EACH CONCRETE PAVER UNIT. DIPPED OR EXTERNALLY COLORED PAVER UNITS ARE UNACCEPTABLE.
6. CURB WILL NEED TO BE CONSTRUCTED ALONG THE ROADWAY EDGE OF PAVEMENT AT THE DRIVEWAY. AS AN ALTERNATE, ON STREETS WITHOUT CURBING, A MINIMUM 12-INCH WIDTH IS ACCEPTABLE (PER PINELLAS COUNTY STANDARD DETAILS INDEX 1305). A MINIMUM OF 6-INCH WIDE AND 6-INCH DEEP CONCRETE EDGE RESTRAINT BAND IS REQUIRED ALONG EACH SIDE OF THE DRIVEWAY TO CONTAIN THE ARCHITECTURAL PAVERS, ON TOP OF SOIL COMPACTED TO 100% MODIFIED PROCTOR DENSITY (AASHTO T-99). ALL CONCRETE SHALL MEET FDOT SPECIFICATIONS FOR CLASS I CONCRETE.
7. FINAL FINISHED SURFACE SHALL BE OF UNIFORM ELEVATION OR SLOPE.
8. SUBGRADE SHALL BE FREE OF CLAY, ORGANICS, OR OTHER MATERIALS WHICH WILL ALLOW FUTURE SETTLEMENT AND COMPACTED TO 100% AASHTO T-99.
9. POLYMERIC SAND OR OTHER JOINT FILLING MATERIAL, AS APPROVED BY THE COUNTY ENGINEER, SHALL BE INSTALLED BETWEEN PAVERS. JOINT SAND SHALL MEET THE GRADING REQUIREMENTS OF ASTM C144 OR CSA-A179. BEDDING SAND MAY BE USED FOR JOINT SAND. JOINT WIDTH SHALL NOT EXCEED 1/8".
10. THE CROSS SLOPE ON ANY REQUIRED PEDESTRIAN PATH CROSSING A DRIVEWAY AND/OR DRIVE APRON CANNOT EXCEED 2%.
11. SAND BEDDING MATERIAL SHALL BE A CLEAN, NON-PLASTIC BEDDING AND JOINT SAND, FREE FROM DELETERIOUS OR FOREIGN MATTER, NATURAL OR MANUFACTURED FROM CRUSHED ROCK, AND SHALL MEET THE GRADING REQUIREMENTS OF ASTM C33 OR CSAA23.1-FA1. DO NOT USE JOINT SAND FOR BEDDING. SAND BEDDING SHOULD BE PLACED TO AN EVEN THICKNESS OF 1-INCH. DO NOT USE THE SAND TO FILL DEPRESSIONS IN THE GRANULAR BASE.
12. IN ACCORDANCE WITH THE 2010 ADA (AMERICANS WITH DISABILITIES ACT) STANDARDS FOR ACCESSIBLE DESIGN (403, 405, 406) THE SURFACE TEXTURE OF PAVERS SHALL BE VIBRATION FREE WITH A LIMIT OF 1/4" OR LESS RISE NOT MORE THAN EVERY 30 INCHES. PAVERS SHALL BE INSTALLED IN A TIGHT UNIFORM CONFIGURATION THAT PROVIDES A SMOOTH SURFACE FOR WHEELCHAIR USERS.
13. PAVERS SHALL NOT IMPEDE DRAINAGE OR RESULT IN ANY PONDING OF WATER. EXISTING DRAINAGE FLOWS SHALL NOT BE ALTERED.
14. ALTERNATE EDGE TREATMENTS MAY BE SUBMITTED FOR APPROVAL TO THE COUNTY BY THE PROPERTY OWNER.

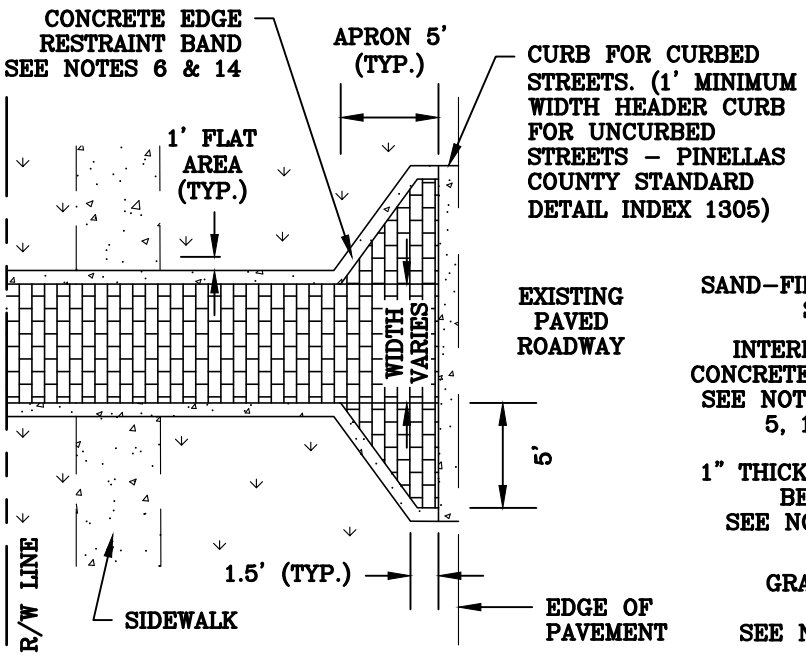

TYPICAL LAYOUT
N.T.S.

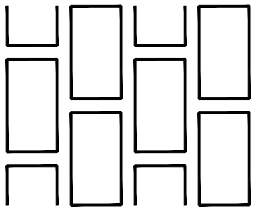

INSTALLATION PATTERN
(PATTERN VARIES WITH SELECTED PAVER)
N.T.S.

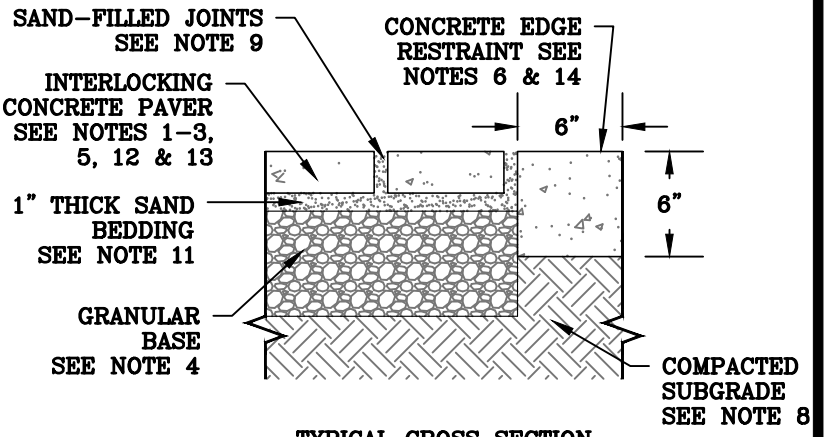

TYPICAL CROSS SECTION
N.T.S.

PINELLAS COUNTY

RESIDENTIAL DRIVEWAY/SIDEWALK PAVER DETAIL

DETAIL INDEX I.D.: 1345

DATE: FEB/2022

NOTES:

1. ADJUST SIDEWALK TO AVOID OBSTRUCTIONS, AS SHOWN, OR AS DIRECTED BY THE ENGINEER, IN ACCORDANCE WITH F.D.O.T. MANUAL OF UNIFORM MINIMUM STANDARDS FOR DESIGN, CONSTRUCTION, AND MAINTENANCE FOR STREETS AND HIGHWAYS – LATEST EDITION ("FLORIDA GREEN BOOK").
2. CONSTRUCTION OF SIDEWALKS SHALL MEET ADA REQUIREMENTS AS SPECIFIED IN F.D.O.T. STANDARD PLANS 522–001.
3. POWER POLES SHALL BE MOVED WHEN POSSIBLE.
4. TREES SHALL BE PRUNED BY AN ISA CERTIFIED ARBORIST IN ACCORDANCE WITH ANSI–A300 GUIDELINES TO MAINTAIN VERTICAL CLEARANCE: 10 FT. FOR SIDEWALKS AND 16 FT. FOR ROADS.
5. MAXIMUM LATERAL DEFLECTION SHALL BE 5:1.
6. FOR ROOT REMOVAL, SEE PC DETAIL 1111.

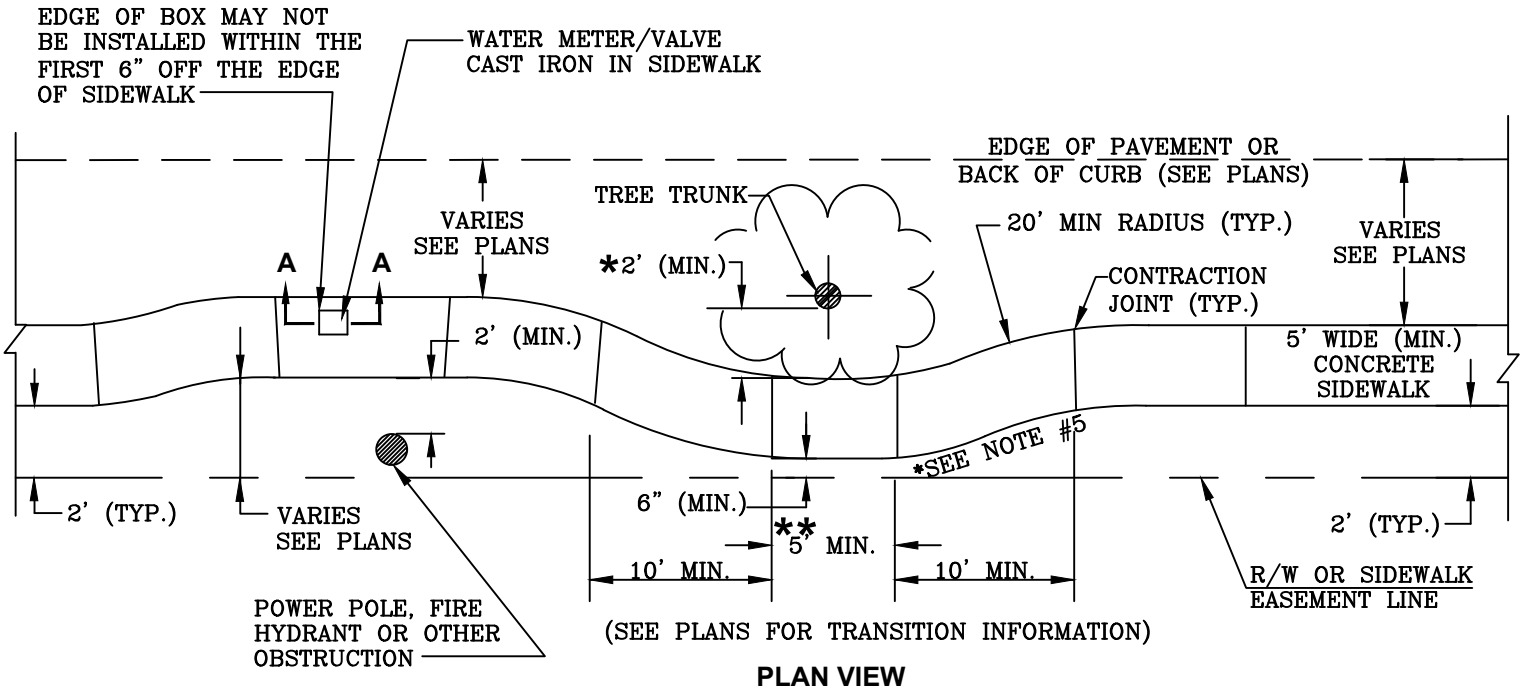

PLAN VIEW

*THIS MINIMUM DIMENSION MAY NEED ADJUSTMENT BASED ON THE DIAMETER, HEALTH AND SPECIES OF THE TREE. ADJUSTMENTS REQUIRE PRE–APPROVAL OF THE COUNTY ENGINEER

**CENTERED ON VERTICAL OBSTRUCTION–SIDEWALK SHALL BE 6" THICK ALONG THIS LENGTH (5'–0" MIN.)

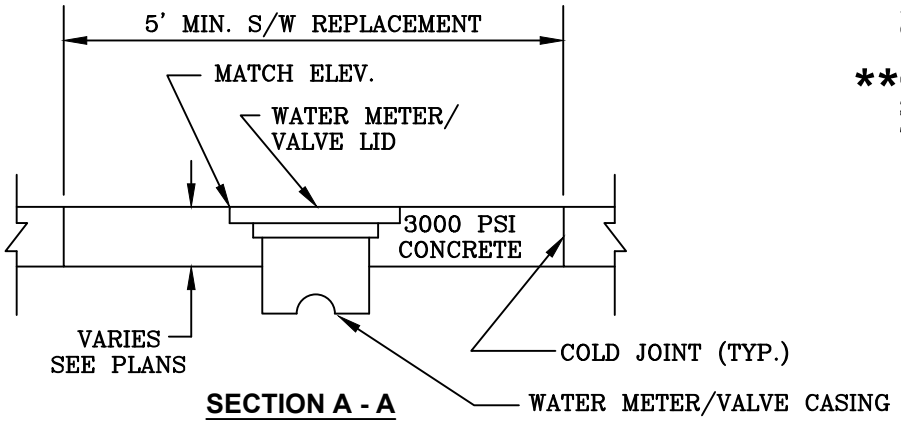

SECTION A - A

NTS

PINELLAS COUNTY

GUIDELINES FOR SIDEWALK ALIGNMENT

DETAIL INDEX I.D.: 1357

DATE: FEB/2022

NOTES:
1. THIS DETAIL SHALL BE USED AT SIDEWALK CONNECTIONS TO TRAILS.
2. REQUESTS FOR SIDEWALK CONNECTIONS TO THE TRAIL SHALL BE REVIEWED AND APPROVED BY PUBLIC WORKS DEPARTMENT AND THE PARKS & CONSERVATION RESOURCES DEPARTMENT.
3. PERMANENT BOLLARDS ARE TO BE PLACED ADJACENT TO THE PROPOSED SIDEWALK CONNECTION AT THE POINT WHERE THE SIDEWALK CONNECTION ORIGINATES.
4. A UTILIZATION PERMIT WILL BE REQUIRED FROM THE DEVELOPMENT REVIEW SERVICES (DRS) DEPARTMENT.

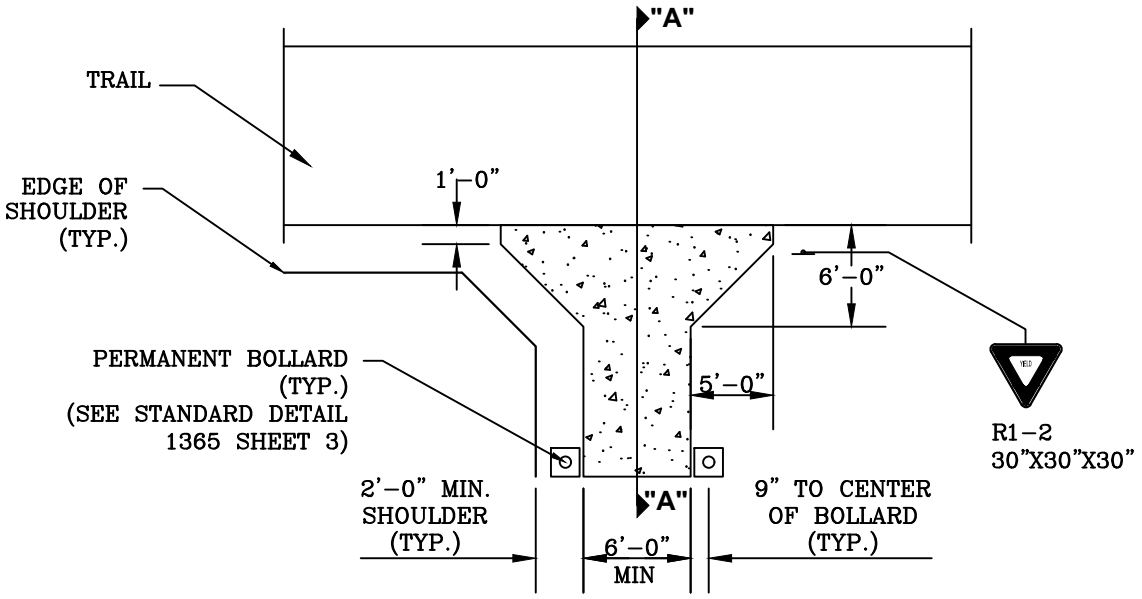

SIDEWALK CONNECTION TO TRAIL
NOT TO SCALE

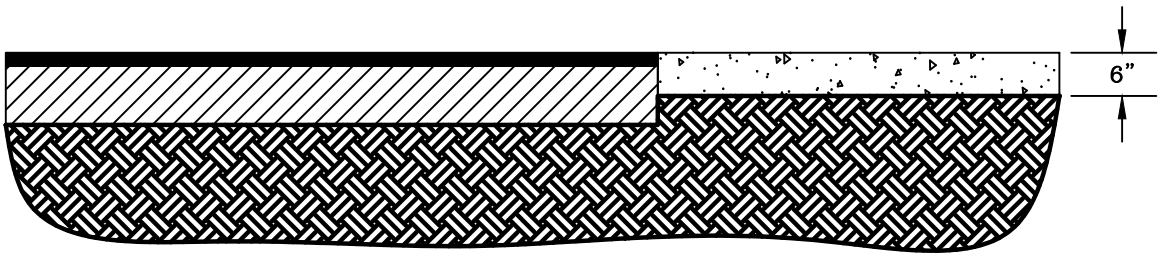

SIDEWALK TRAIL CONNECTION DETAIL A
NOT TO SCALE

PINELLAS COUNTY

P.C.E.D. SIDEWALK / TRAIL CONNECTION DETAIL

DETAIL INDEX I.D.: 1361

DATE: FEB/2022

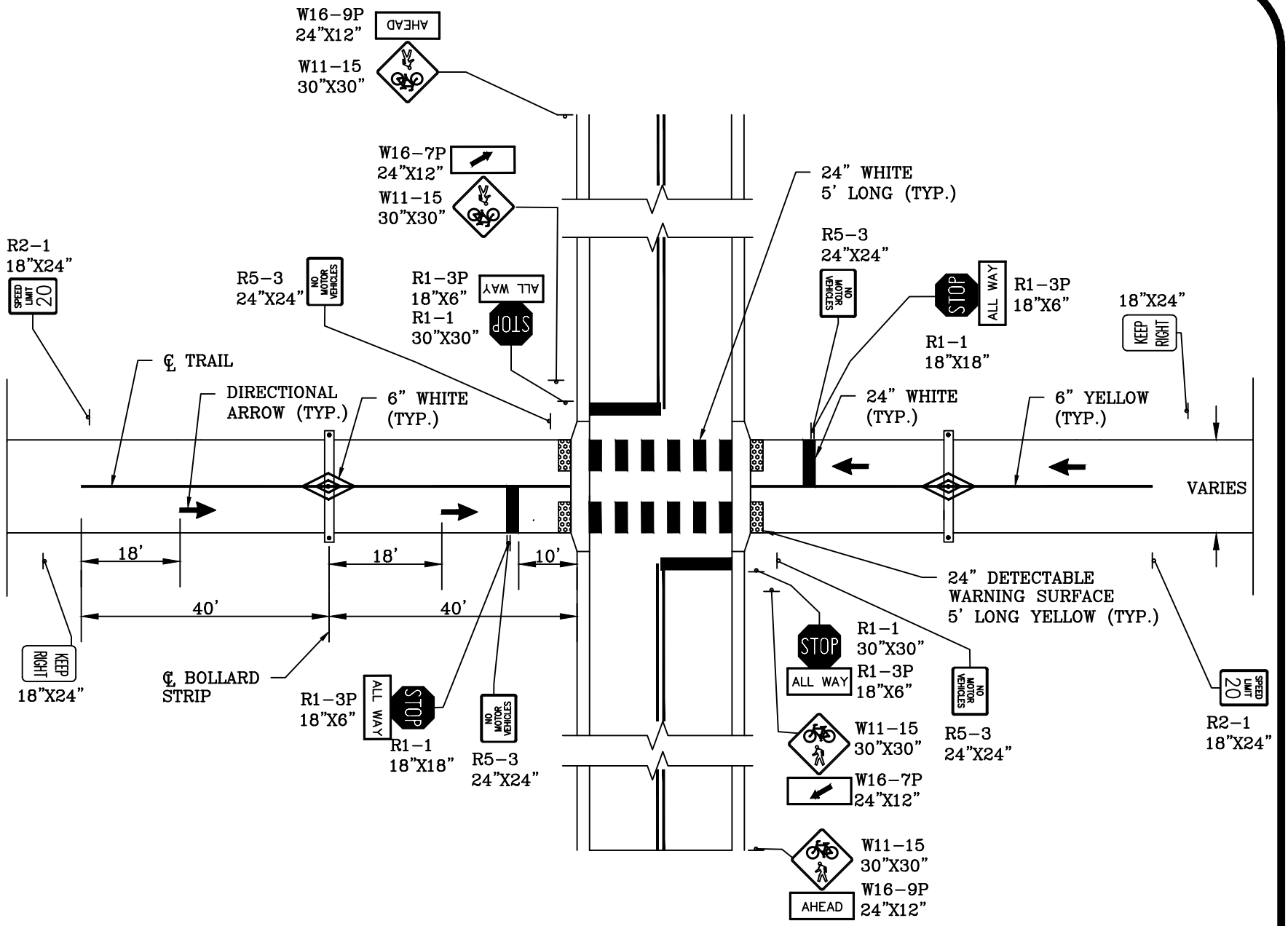

NOTES:

1. WARNING SIGNS W11-5, W16-9P, W16-7P SHALL BE IN ACCORDANCE WITH THE MUTCD, SECT. 1A-12, COLOR CODE "F"-FLUORESCENT YELLOW-GREEN.
2. OFFSET DISTANCES FOR SIGNS SHALL BE IN ACCORDANCE WITH FDOT STANDARD PLANS AND/OR DIMENSIONS PROVIDED IN THE CONSTRUCTION PLANS.
3. DETECTABLE WARNINGS SHALL BE IN ACCORDANCE WITH PINELLAS COUNTY SPECIFICATION 527
4. TRAIL WIDTHS VARY. SOLID YELLOW PAVEMENT MARKING SHALL BE PLACED ALONG THE CENTERLINE OF THE TRAIL

TRAIL INTERSECTION DETAIL

NOT TO SCALE

PINELLAS COUNTY

P.C.E.D. TRAIL INTERSECTION

CROSSING DETAIL - SHEET 1 OF 4

DETAIL INDEX I.D.: 1365-SHT.1

DATE: FEB/2022

NOTES:

1. ALL BOLLARDS CONSTRUCTED WITHIN THE CONCRETE BOLLARD ASSEMBLY ARE PAID FOR UNDER CONCRETE BOLLARD STRIP ASSEMBLY.
2. ALL BOLLARDS CONSTRUCTED OUTSIDE OF THE CONCRETE BOLLARD STRIP ASSEMBLY ARE PAID FOR UNDER A SEPARATE PAY ITEM UNLESS OTHERWISE NOTED.
3. TYPICAL TRAIL WIDTH IS 15 FEET; HOWEVER, TRAIL WIDTHS MAY VARY. WIDTH OF BOLLARD STRIP SHALL BE ADJUSTED TO FIT ACTUAL TRAIL WIDTH
4. E/P REPRESENTS EDGE OF PAVEMENT

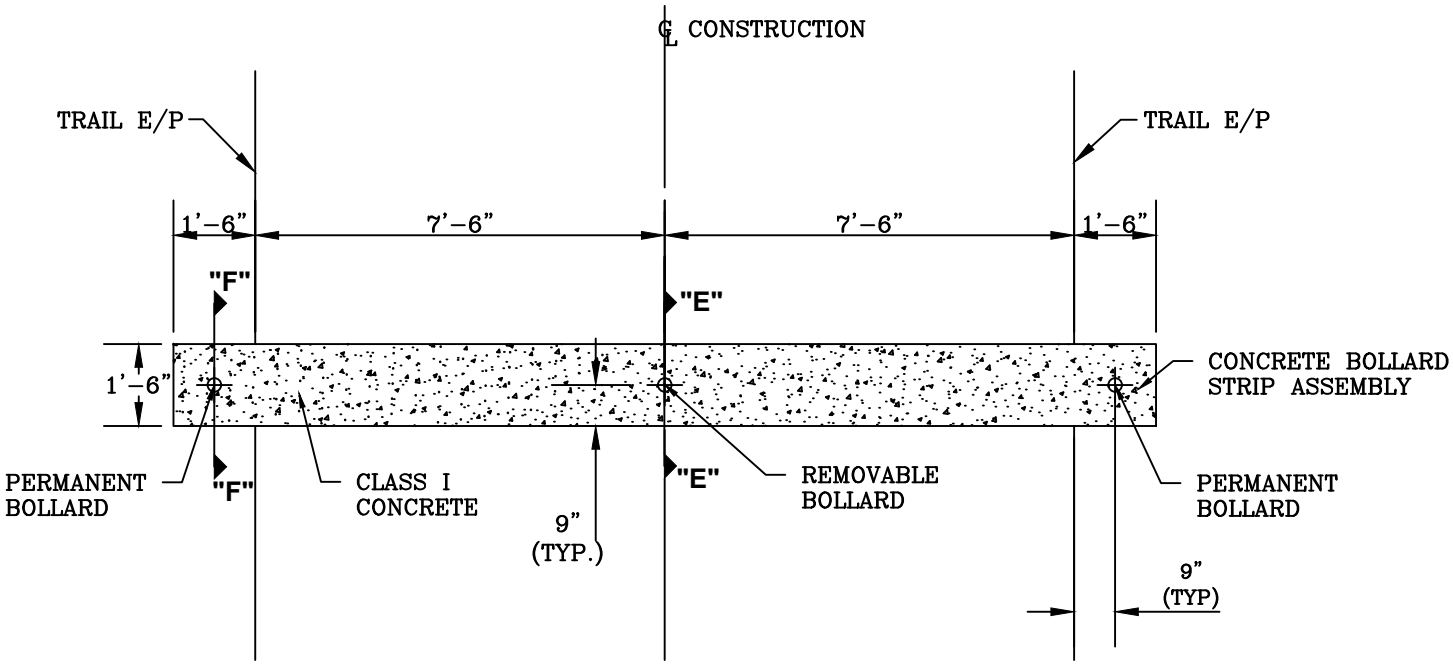

BOLLARD STRIP PLAN VIEW
NOT TO SCALE

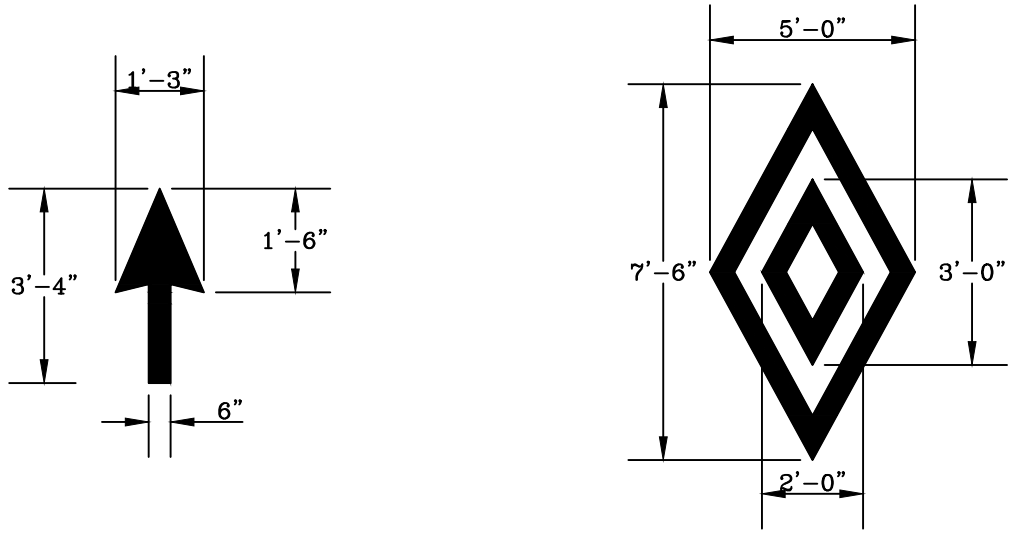

PAVEMENT MESSAGE DIMENSIONS
ALL MARKINGS ARE WHITE
NOT TO SCALE

PINELLAS COUNTY

P.C.E.D. TRAIL INTERSECTION
CROSSING DETAIL - SHEET 2 OF 4

DETAIL INDEX I.D.: 1365-SHT.2

DATE: FEB/2022

NOTES:

1. ALL CONSTRUCTION AND MATERIALS SHALL CONFORM TO U.S. DEPARTMENT OF TRANSPORTATION, FEDERAL HIGHWAY ADMINISTRATION MANUAL ON UNIFORM TRAFFIC CONTROL DEVICES.
2. ALL SIGNAGE TO BE ERECTED ALONG TRAIL IS TO BE OFFSET 4' FROM EDGE OF PAVEMENT TO NEAREST EDGE OF SIGN AND 7' FROM THE PROPOSED GRADE TO THE BOTTOM OF THE SIGN.
3. 6" WIDE 3MTM PRESSURE SENSITIVE, HIGH-INTENSITY GRADE RED REFLECTIVE SHEETING, TO BE PLACED ON ALL BOLLARDS. OVERLAP ENDS OF SHEETING BY ¼" MINIMUM.
4. ALL BOLLARDS CONSTRUCTED WITHIN THE CONCRETE BOLLARD ASSEMBLY ARE PAID FOR UNDER CONCRETE BOLLARD STRIP ASSEMBLY.
5. ALL BOLLARDS CONSTRUCTED OUTSIDE OF THE CONCRETE BOLLARD STRIP ASSEMBLY ARE PAID FOR UNDER A SEPARATE PAY ITEM UNLESS OTHERWISE NOTED.
6. CONTRACTOR SHALL USE DURABLE REFLECTIVE PAINT DESIGNED FOR APPLICATION ON PVC AND/OR STEEL COMPONENTS. SPECIFICATIONS OF PROPOSED PAINT SHALL BE SUBMITTED TO THE COUNTY FOR REVIEW AND APPROVAL PRIOR TO COMMENCEMENT OF PAINTING OPERATIONS. CONTRACTOR SHOULD PREPARE SURFACE ACCORDING TO MANUFACTURER'S DIRECTION.

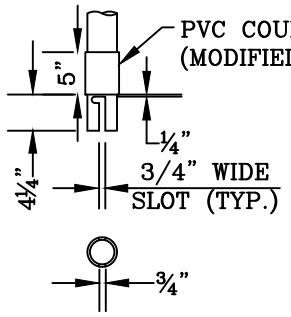

NOTE:
3" P.V.C. COUPLING SHALL BE MACHINED FOR A SLIP-FIT. UNIFORM INSIDE ø IN ORDER TO ALLOW THE COUPLING TO BE SOLVENT WELDED AT THE POSITION SHOWN. THE OUTSIDE ø SHALL BE MACHINED TO ALLOW THE COUPLING TO SLIDE FREELY WITHIN THE 4" P.V.C. PIPE EMBEDDED IN CONCRETE AS SHOWN IN THE REMOVABLE BOLLARD DETAIL.

SLOT AND COUPLING DETAIL
NOT TO SCALE

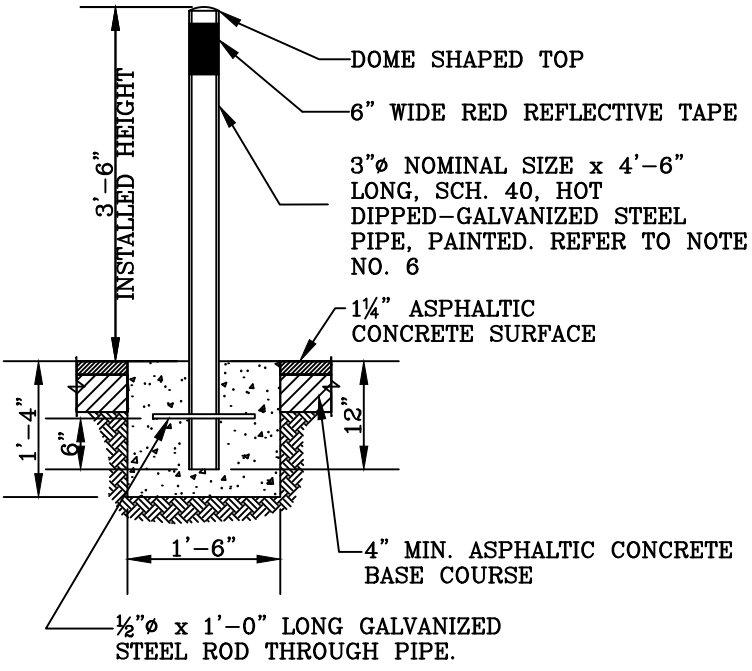

PERMANENT BOLLARD DETAIL "F"
NOT TO SCALE

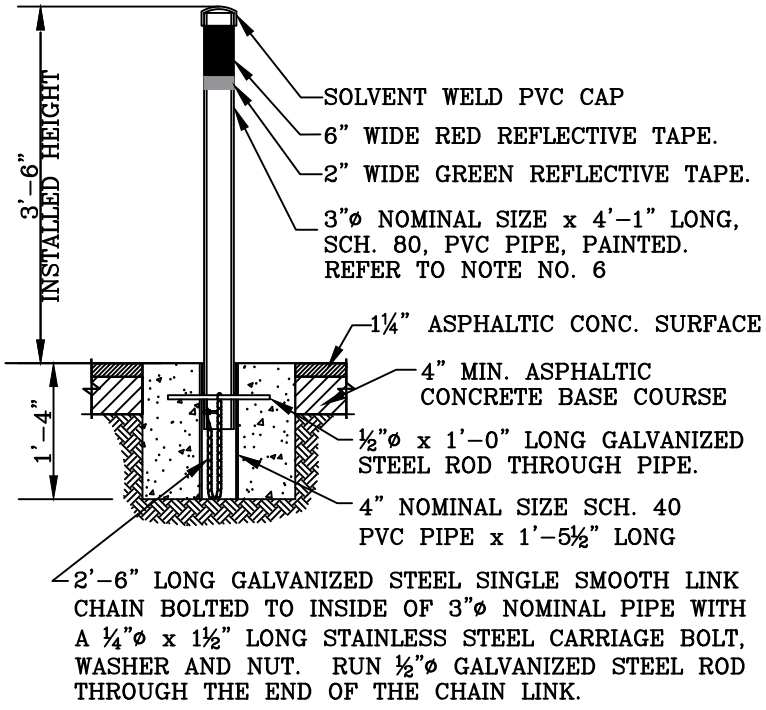

REMOVABLE BOLLARD DETAIL "E"
NOT TO SCALE

PINELLAS COUNTY

P.C.E.D. TRAIL INTERSECTION
CROSSING DETAIL - SHEET 3 OF 4

DETAIL INDEX I.D.: 1365-SHT.3

DATE: FEB/2022

NOTES:
1. TRUNCATED DOME (TYPE AND COLOR) AS PER PINELLAS COUNTY SPECIFICATION 527

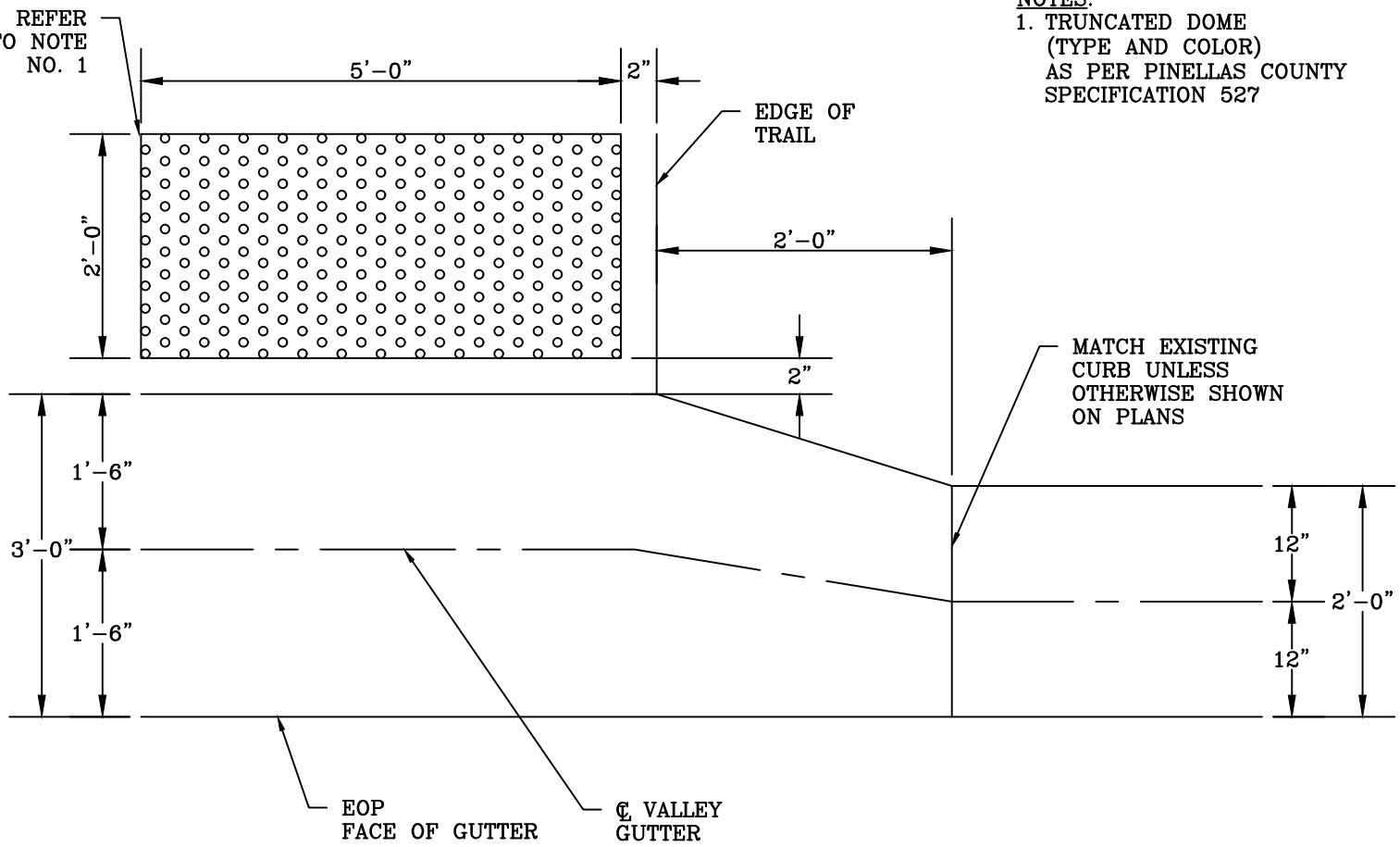

VALLEY GUTTER TRANSITION
NOT TO SCALE

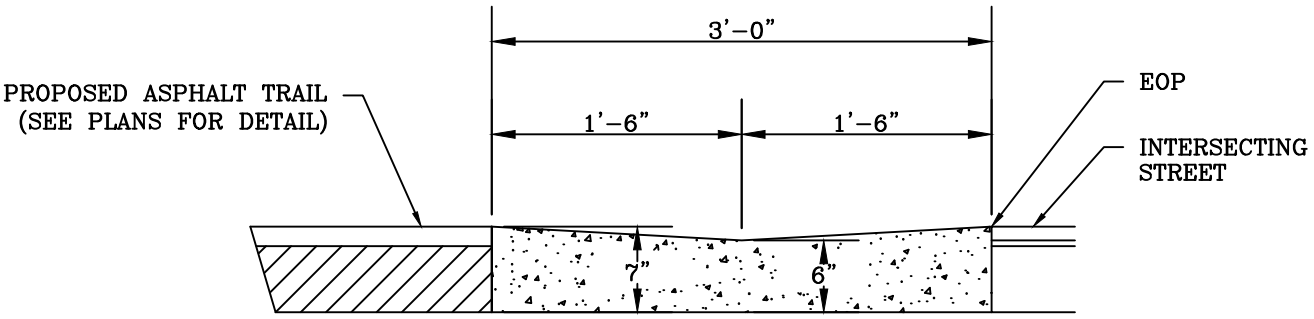

VALLEY GUTTER DETAIL
NOT TO SCALE

PINELLAS COUNTY

P.C.E.D. TRAIL INTERSECTION
CROSSING DETAIL - SHEET 4 OF 4

DETAIL INDEX I.D.: 1365-SHT.4
DATE: FEB/2022

NOTE:

1. THE USE OF ALUMINUM SLEEVES SHALL BE APPLICABLE FOR ALL CASES WHERE A SIGN POST IS PLACED IN CONCRETE (I.E., SIDEWALKS, ETC.). WHEN PLACED IN A CONCRETE MEDIAN OR TRAFFIC SEPARATOR, IT SHALL BE CENTERED 6' FROM NOSE END, UNLESS OTHERWISE SPECIFIED IN THE PLANS.

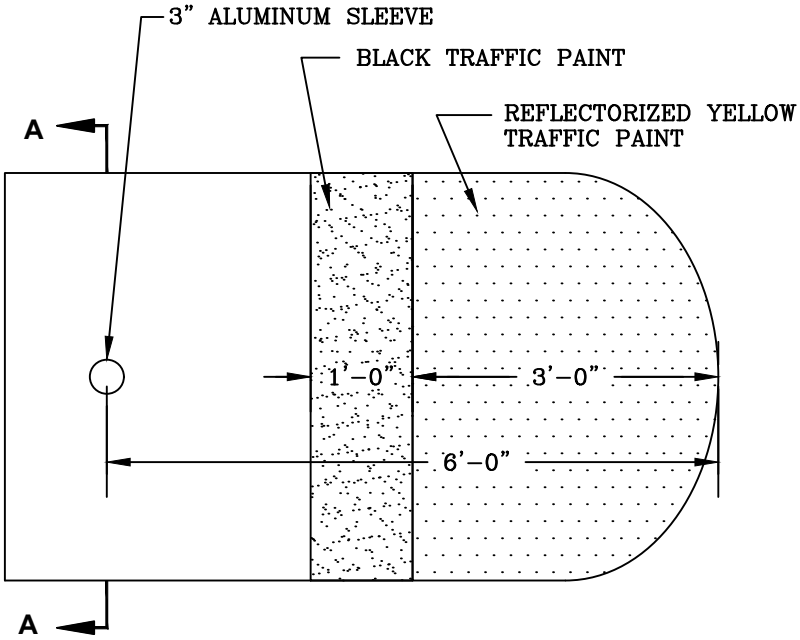

TOP VIEW
MEDIAN NOSE
N.T.S.

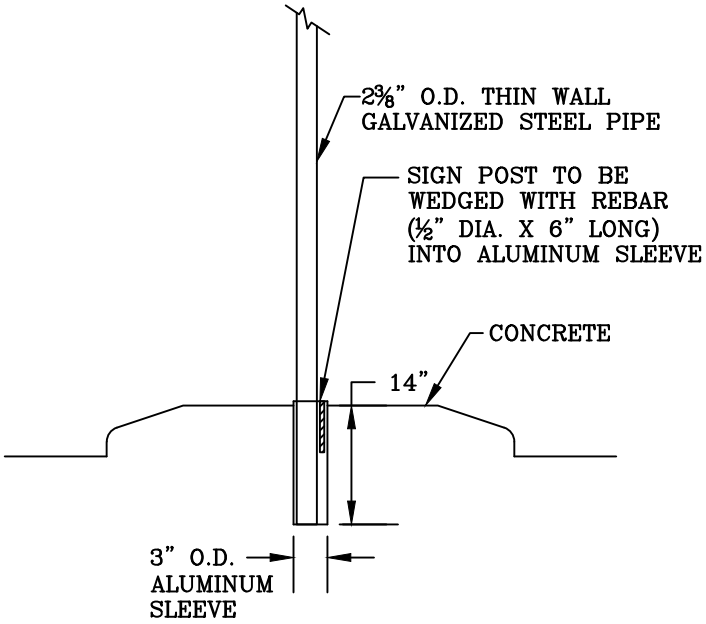

SECTION A-A
N.T.S.

PINELLAS COUNTY

TRAFFIC SIGN INSTALLATION
INTO CONCRETE

DETAIL INDEX I.D.: 1380

DATE: FEB/2022

NOTES:

1. STRIPES SHALL BE WHITE AND ORANGE FOR TEMPORARY BARRICADE DURING CONSTRUCTION PHASE AND WHITE AND RED FOR PERMANENT BARRICADE WITH A MATERIAL THAT HAS A HIGH INTENSITY AND SMOOTH SEALED OUTER SURFACE. USE ONLY PRESSURE TREATED POSTS (ASTM D-1760 PRESSURE TREATMENT OF TIMBER PRODUCTS).
2. USE ONLY GALVANIZED COATED HARDWARE.
3. THE SPACING OF REFLECTORS SHALL ALIGN WITH BARRICADE POSTS.
4. REFLECTOR PANEL AND POST ASSEMBLY SHALL COMPLY WITH F.D.O.T. INDEX No.700-109 FOR CASE 2 AND SECTION 994 OF F.D.O.T. SPECIFICATIONS.

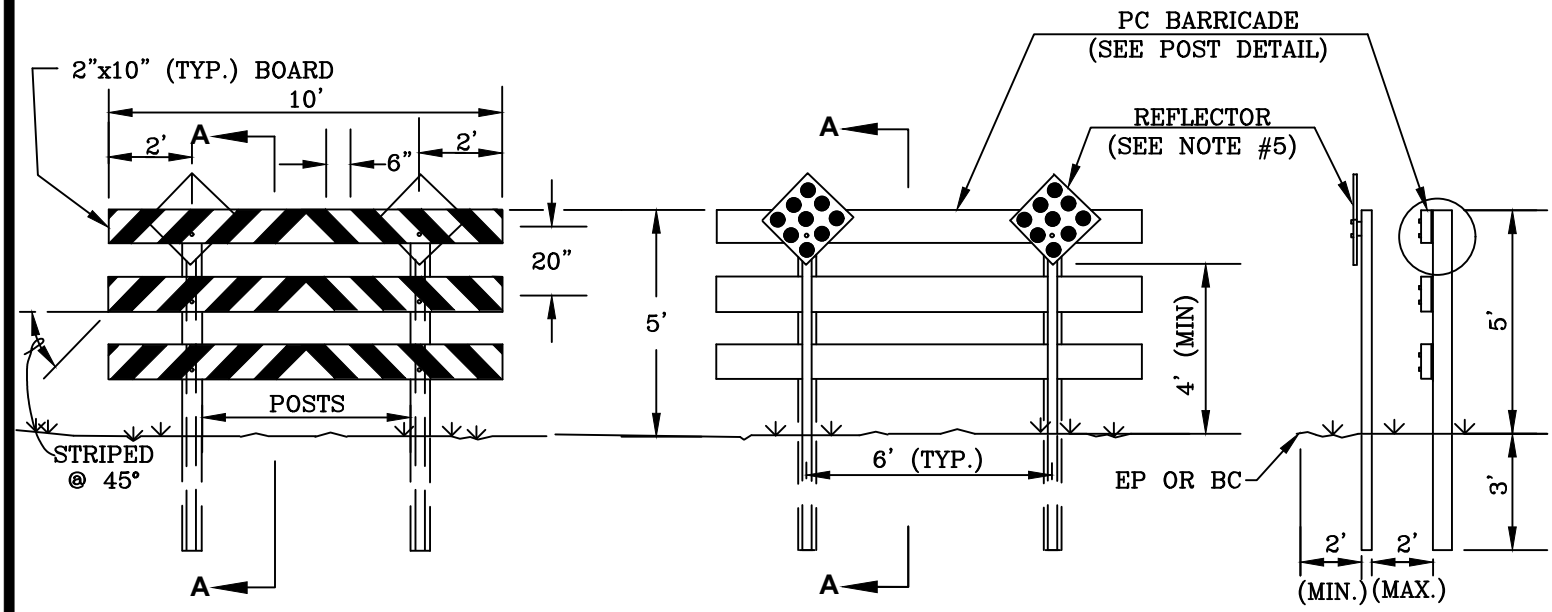

BARRICADE TYPE 3 **REFLECTOR CASE 2** **SECTION A-A**

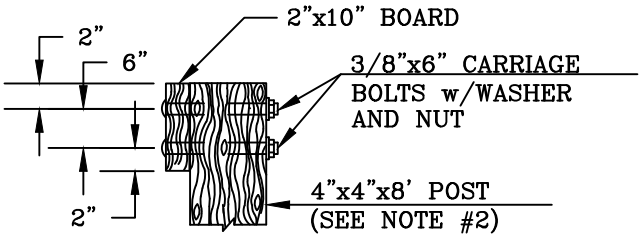

WOOD POST

PINELLAS COUNTY

BARRICADE WITH REFLECTORS

DETAIL INDEX I.D.: 1406

DATE: FEB/2022

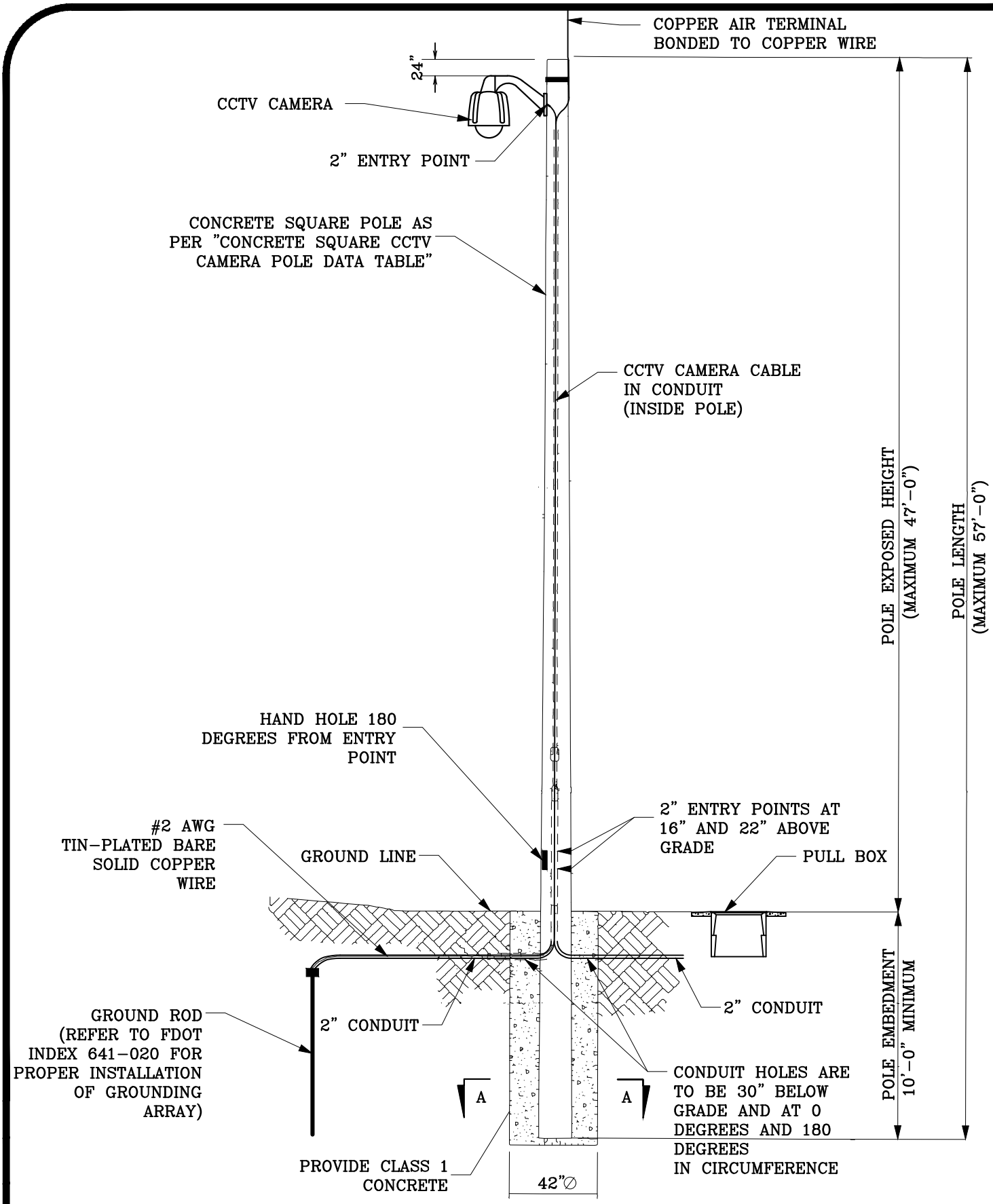

PINELLAS COUNTY

CONCRETE SQUARE CCTV CAMERA POLE
SHEET 1 OF 2

DETAIL INDEX I.D.: 1700 - SH.1

DATE: FEB/2022

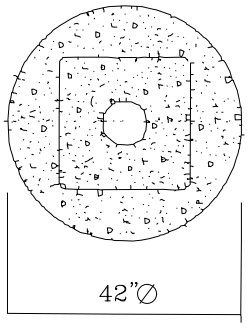

SECTION A–A

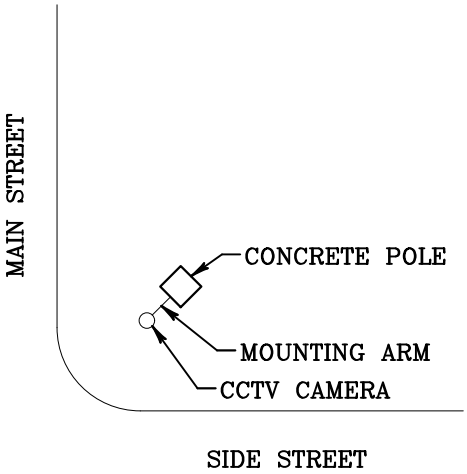

CCTV ORIENTATION DETAIL

CONCRETE SQUARE CCTV CAMERA POLE DATA TABLE					
EXPOSED POLE LENGTH (ft)	GRADE SLOPE	POLE TIP WIDTH (in)	POLE TAPER (in/ft)	EMBEDMENT DEPTH (ft)	TOTAL POLE LENGTH (ft)
47	Flat	8.5	0.162	10	57

NOTES:

1. ALL POLES SHALL BE FULLY EMBEDDED IN FDOT CLASS 1 CONCRETE WITH MINIMUM COMPRESSIVE STRENTH OF THREE THOUSAND (3000) PSI AT TWENTY–EIGHT (28) DAYS.

2. WORK THIS SHEET WITH FDOT INDEX 641–010 STANDARD TYPE P–IV POLE DESIGN ONLY.

3. ONLY ATTACHMENT ALLOWED ON POLES IS THE CCTV CAMERA.

PINELLAS COUNTY

CONCRETE SQUARE CCTV CAMERA POLE
SHEET 2 OF 2

DETAIL INDEX I.D.: 1700 - SH.2

DATE: FEB/2022

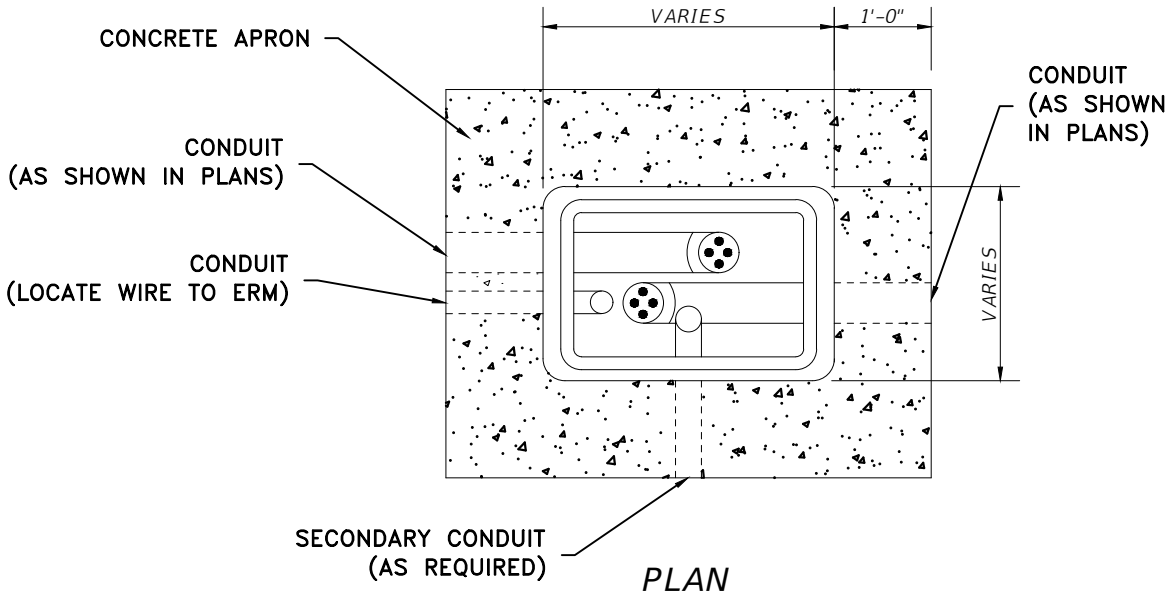

PLAN

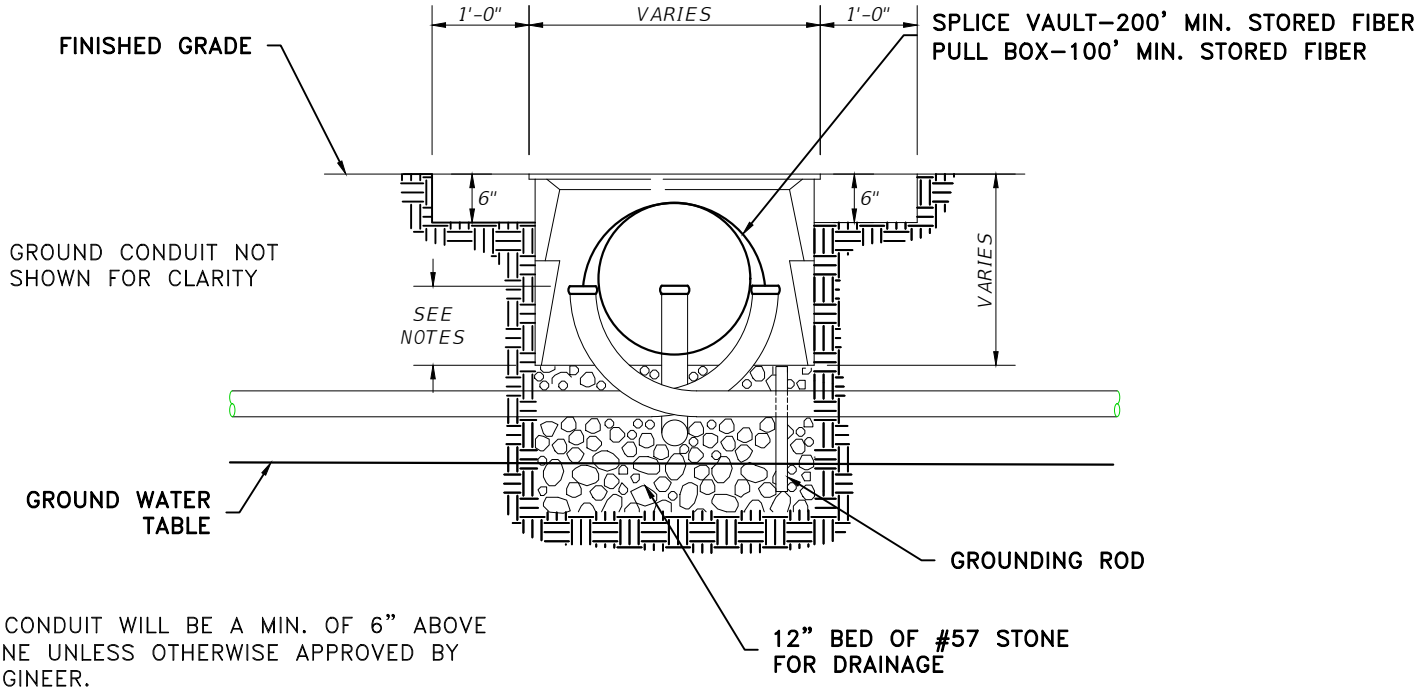

NOTES:

1. ALL CONDUIT WILL BE A MIN. OF 6" ABOVE 57 STONE UNLESS OTHERWISE APPROVED BY THE ENGINEER.

2. 1" INNER DUCTS SHALL BE INSTALLED A MIN OF 24" LONGER THAN 4" OUTER DUCT UNLESS OTHERWISE APPROVED BY THE ENGINEER.

3. PLACE GROUND RODS IN ELECTRICAL PULL BOXES ONLY.

ELEVATION

FIBER OPTIC BOX
N.T.S

PINELLAS COUNTY

FIBER OPTIC PULL BOXES
SHEET 1 OF 2

DETAIL INDEX I.D.: 1701 - SH.1

DATE: FEB/2022

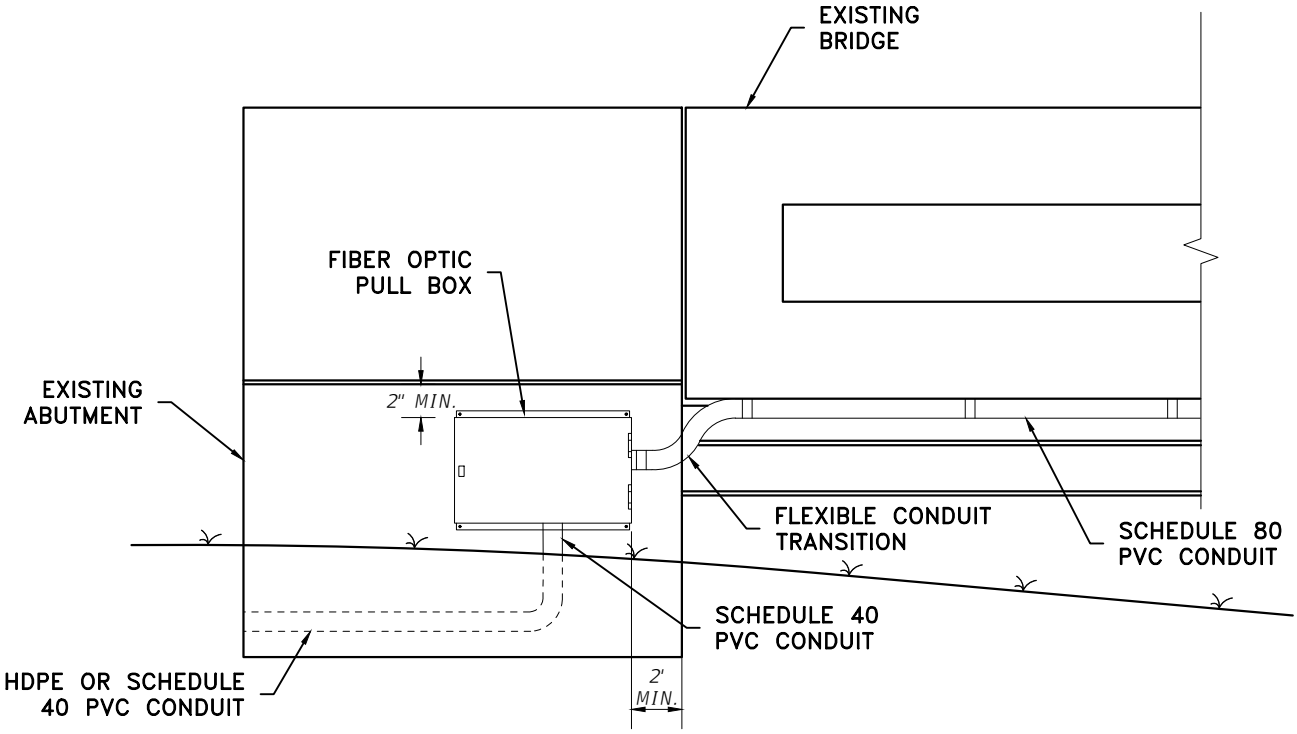

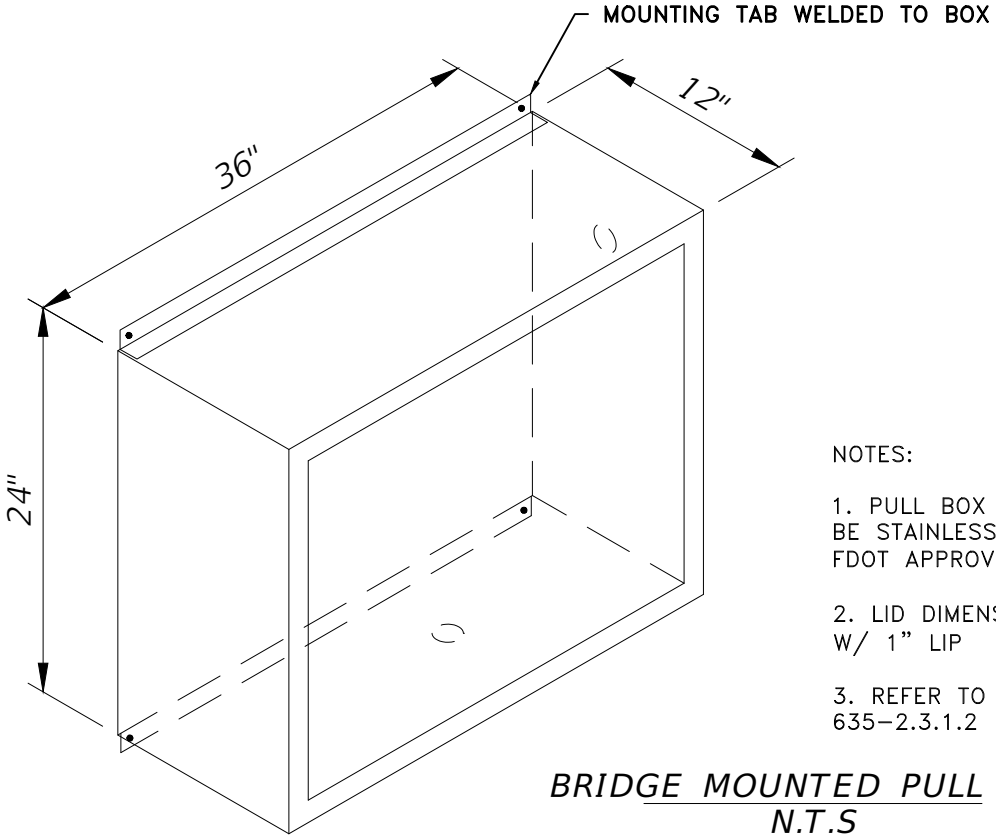

NOTES:

1. PULL BOX AND MOUNTING HARDWARE SHALL BE STAINLESS STEEL. EPOXY SHALL BE ON THE FDOT APPROVE PRODUCTS LIST (APL).

2. LID DIMENSIONS ARE 36-7/8" X 24-3/4" W/ 1" LIP

3. REFER TO PINELLAS COUNTY SPECIFICATION 635-2.3.1.2

BRIDGE MOUNTED PULL BOX
N.T.S

PINELLAS COUNTY	DETAIL INDEX I.D.: 1701 - SH.2
	DATE: FEB/2022
BRIDGE MOUNTED PULL BOX SHEET 2 OF 2	

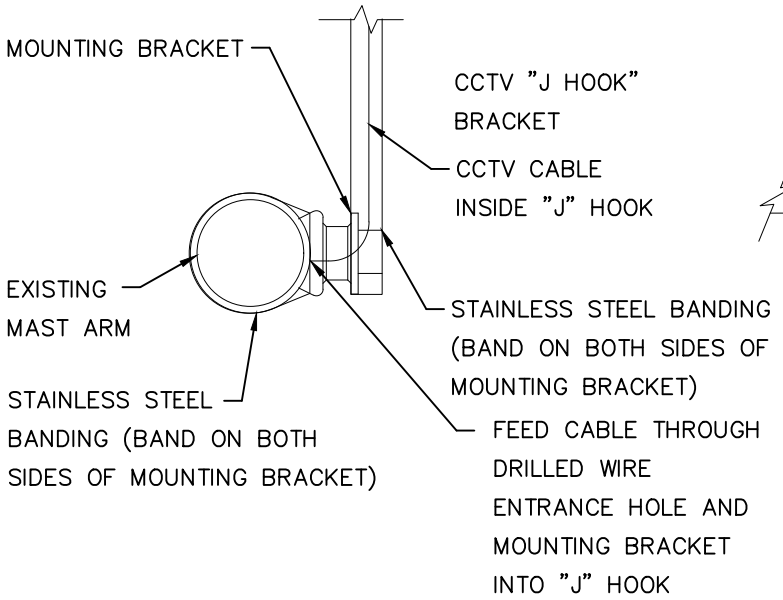

DETAIL "A"

N.T.S.

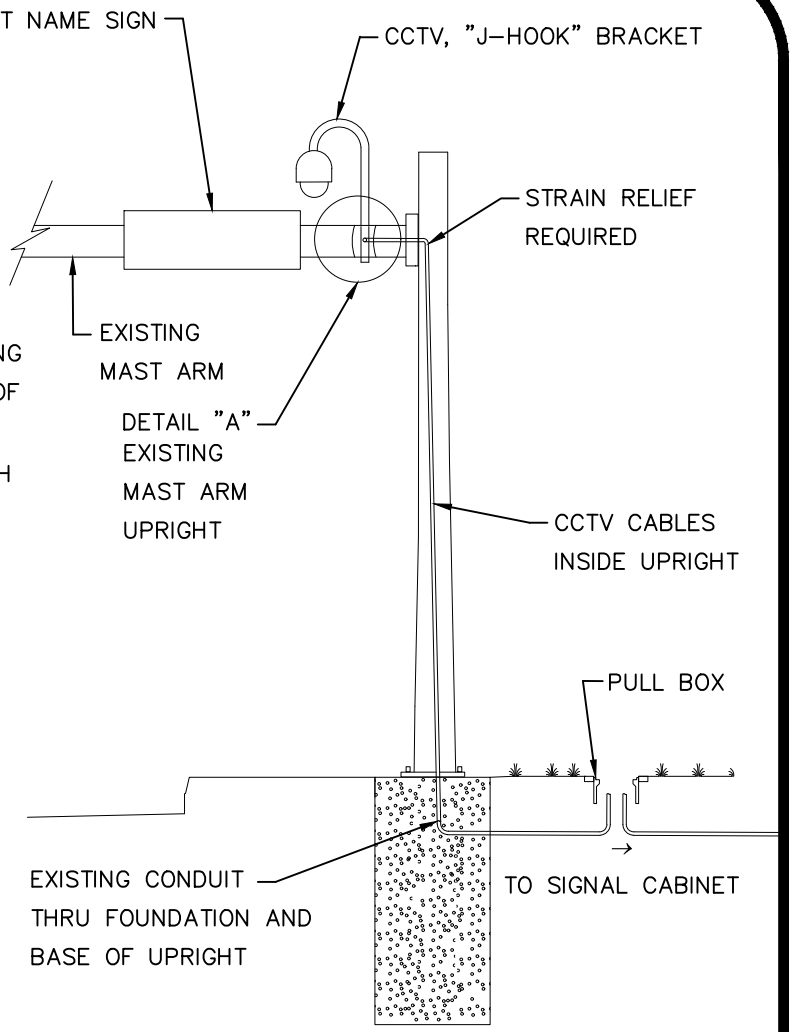

NOTES:

1. ALL MOUNTING HARDWARE AND BRACKET SHALL BE PROVIDED BY PINELLAS COUNTY.
2. THE CONTRACTOR SHALL MOUNT THE "J HOOK" BRACKET AS HIGH AS POSSIBLE BUT SO THAT IT STILL SITS FIRMLY IN THE MOUNTING HARDWARE BRACKET. THE ATTACHMENT SHALL BE INSPECTED BY THE ENGINEER BEFORE THE CCTV CAMERA IS INSTALLED.
3. THE CONTRACTOR SHALL FIELD DRILL A HOLE IN THE MAST ARM OF A MINIMUM DIAMETER TO ACCOMMODATE THE CCTV CAMERA CABLE.
4. THE CONTRACTOR SHALL COLD GALVANIZE THE DRILLED HOLE AND PLACE A WEATHER-TIGHT GROMMIT IN THE HOLE PRIOR TO RUNNING THE CCTV CAMERA CABLE INTO THE ARM.
5. THE CONTRACTOR SHALL TOUCH UP THE MAST ARM PAINT DUE TO SCRATCHES OR CHIPS DURING THE INSTALLATION OF THE CCTV CAMERA AND CAMERA CABLE.
6. THE COST FOR LABOR AND MATERIALS FOR TOUCH UP AND GROMMITS SHALL BE INCLUDED UNDER THE CCTV PAY ITEM 682-1-30 OR 682-1-31.
7. FIELD VERIFY THE LOCATION OF THE CCTV "J-HOOK" BRACKET MOUNTING LOCATION WITH PINELLAS COUNTY TRAFFIC PRIOR TO INSTALLATION.

PINELLAS COUNTY	DETAIL INDEX I.D.: 1705
	DATE: FEB/2022
CCTV MOUNTING DETAIL	

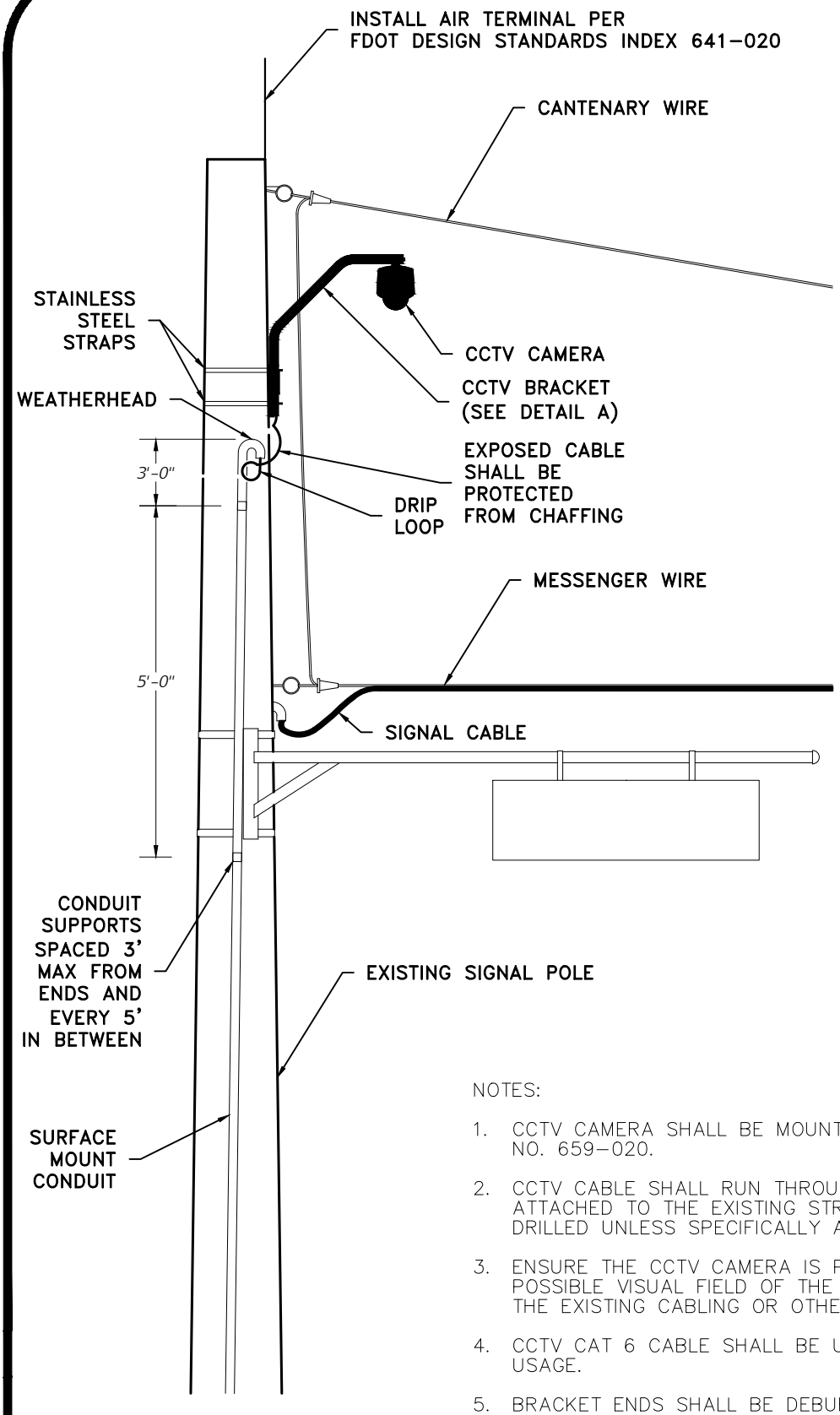

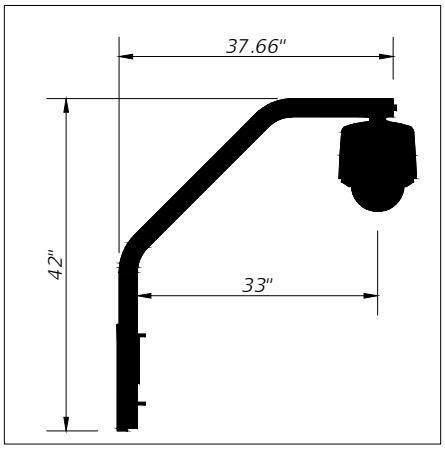

DETAIL "A"
CCTV BRACKET
N.T.S.

NOTES:

1. CCTV CAMERA SHALL BE MOUNTED PER FDOT STANDARD PLANS INDEX NO. 659-020.
2. CCTV CABLE SHALL RUN THROUGH AN ABOVE GROUND CONDUIT TO BE ATTACHED TO THE EXISTING STRAIN POLE. STRAIN POLE IS NOT TO BE DRILLED UNLESS SPECIFICALLY APPROVED BY THE ENGINEER
3. ENSURE THE CCTV CAMERA IS POSITIONED TO PROVIDE MAXIMUM POSSIBLE VISUAL FIELD OF THE ROADWAY AND NOT CONFLICT WITH THE EXISTING CABLING OR OTHER UTILITIES.
4. CCTV CAT 6 CABLE SHALL BE UV RESISTANT AND RATED FOR EXTERIOR USAGE.
5. BRACKET ENDS SHALL BE DEBURRED AND A SECURED CAP INSTALLED ON THE BOTTOM END OF BRACKET.

PINELLAS COUNTY	DETAIL INDEX I.D.: 1706
CCTV POLE MOUNT	DATE: FEB/2022

NOTES:

1. FOR MORE INFORMATION ON THE ELECTRONIC ROUTE MARKER (ERM), SEE SECTION 630 IN THE STANDARD TECHNICAL SPECIFICATIONS FOR ROADWAY AND GENERAL CONSTRUCTION.
2. ERM SHALL BE INSTALLED BEFORE PLACING THE CONCRETE APRON AROUND THE FIBER OPTIC PULL BOX OR SPLICE VAULT. HOWEVER, THE ERM SHALL NOT BE PLACED WITHIN THE CONCRETE APRON.
3. SHOP DRAWINGS FOR THE ERM ARE REQUIRED.
4. AT THE DIRECTION OF THE ENGINEER STANDARD ROUTE MARKERS (SRM) SHALL BE PLACED AT THE MIDPOINT OF THE CONDUIT RUN BETWEEN THE FIBER OPTIC PULL BOXES AND/OR SPLICE VAULTS. ROUTE MARKERS SHALL NOT BE INSTALLED IN DRIVEWAYS OR SIDEWALKS.
5. THE COST FOR THE ERMs SHALL BE PAID FOR UNDER PAY ITEMS 630-2 FOR CONDUIT.
6. THE TRACER WIRE FOR ALL CONDUIT LOCATING SHALL BE SPLICED TOGETHER IN ONE CONTINUOUS LENGTH.
7. ROUTE MARKERS SHALL NOT BLOCK OR INHIBIT REMOVAL OF PULLBOX/SPLICE VAULT LIDS, IN EITHER DIRECTION.
8. TOP OF ROUTE MARKER SHALL BE EQUIPPED WITH A TEST STATION WITH STAINLESS STEEL TERMINALS.
9. ALL ROUTE MARKERS TO BE ANCHORED WITH GALVANIZED POST.

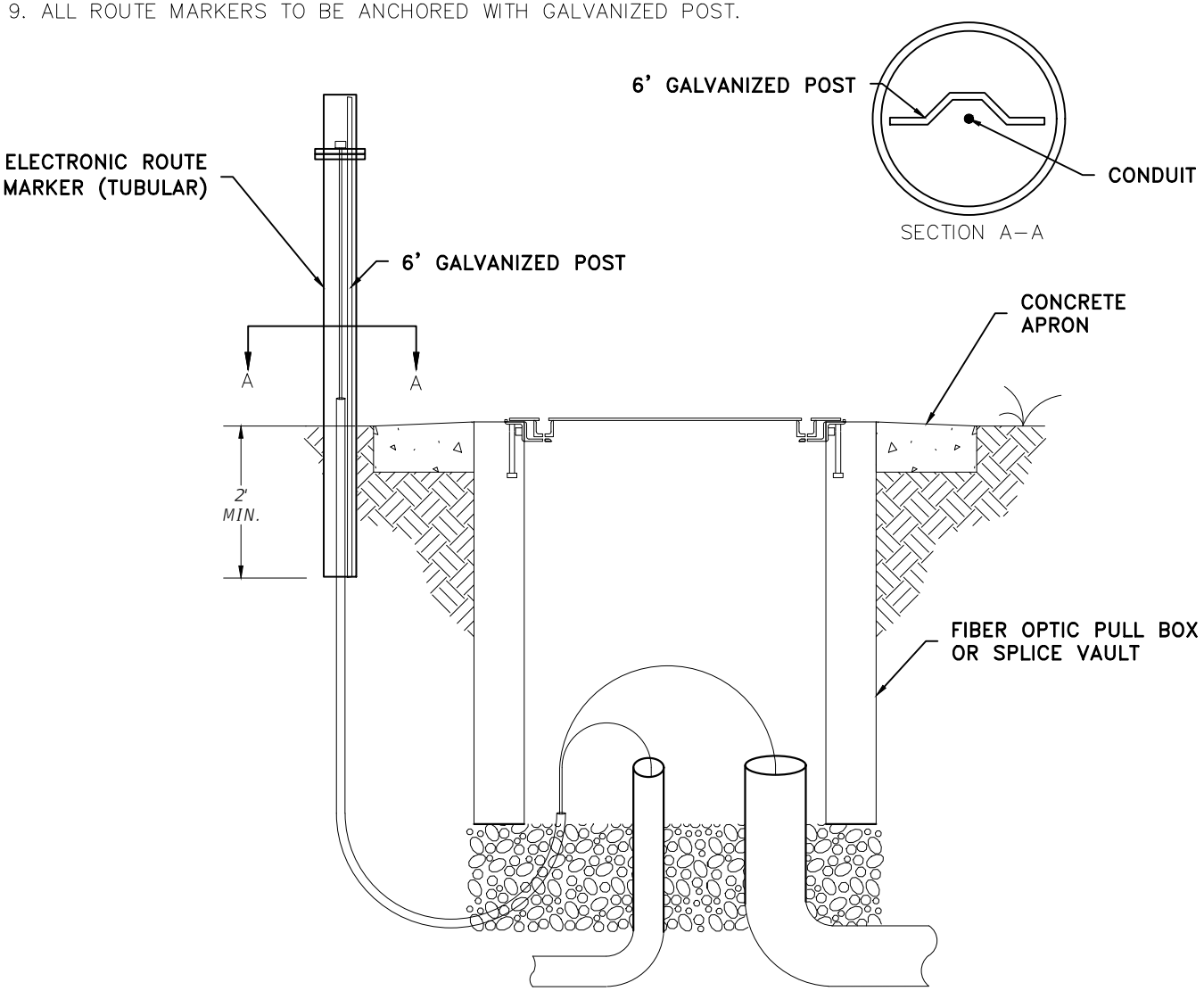

PINELLAS COUNTY	DETAIL INDEX I.D.: 1710 - SH. 1
	DATE: FEB/2022
ELECTRONIC ROUTE MARKER DETAIL SHEET 1 OF 2	

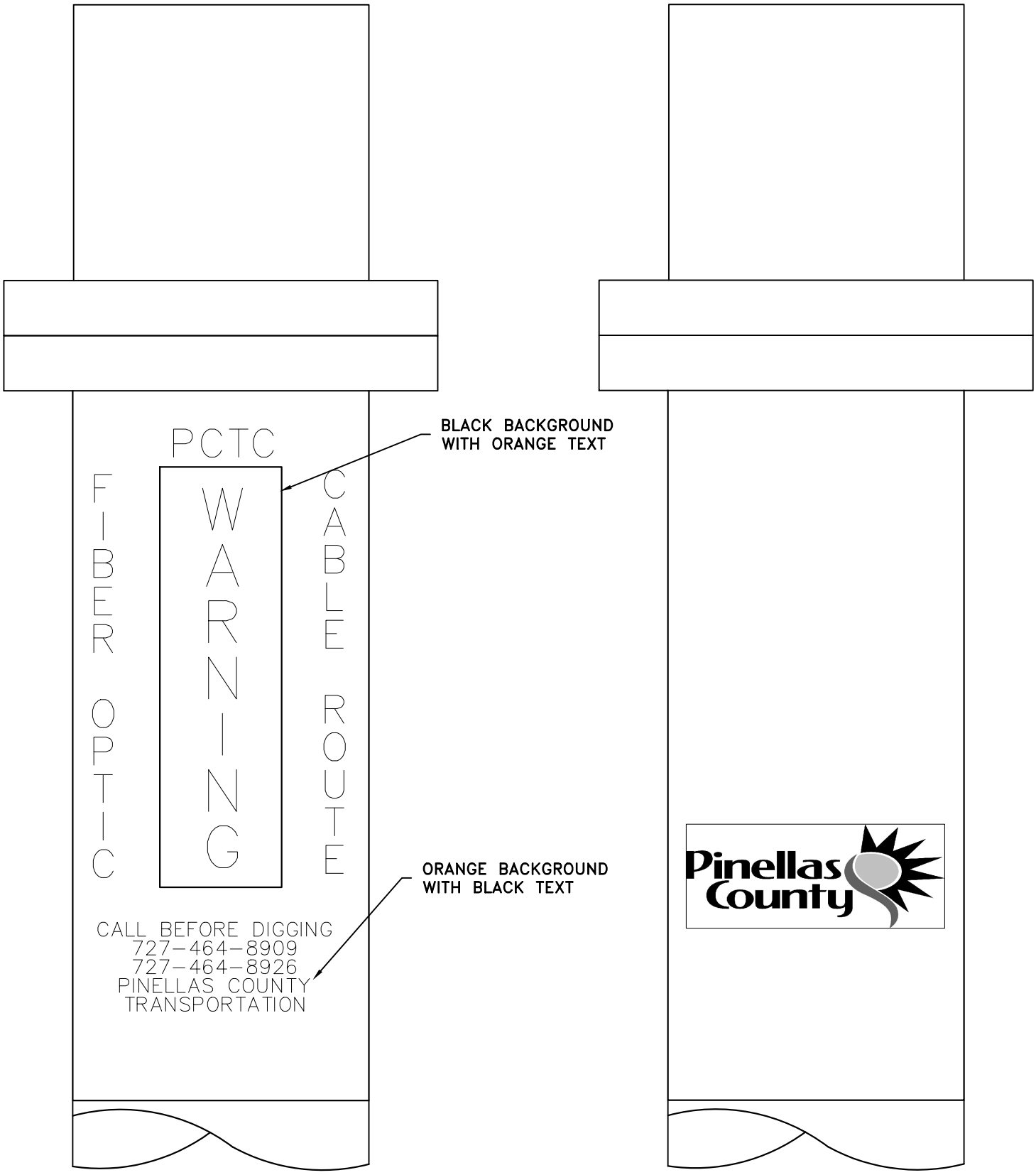

PINELLAS COUNTY

ELECTRONIC ROUTE MARKER DETAIL
SHEET 2 OF 2

DETAIL INDEX I.D.: 1710 - SH.2

DATE: FEB/2022

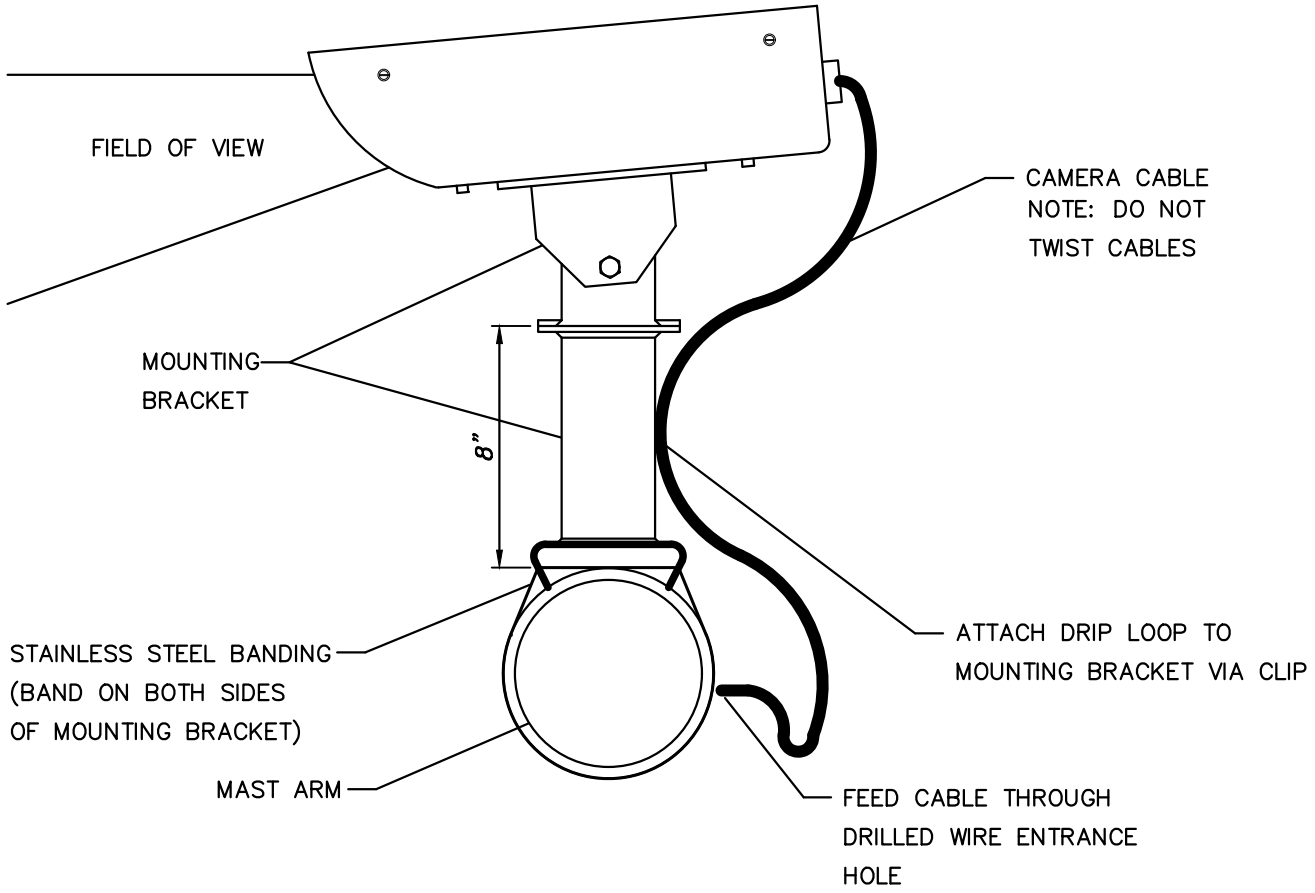

VVDS ATTACHMENT FOR MAST ARMS

N.T.S.

NOTES:

1. THE CONTRACTOR SHALL FIELD DRILL A HOLE IN THE MAST ARM OF MINIMUM SIZE TO ACCOMMODATE THE VIDS CABLE.

2. THE CONTRACTOR SHALL COLD GALVANIZE THE DRILLED HOLE AND PLACE A WEATHER-TIGHT GROMMIT IN THE HOLE PRIOR TO RUNNING THE VIDS CABLE INTO THE ARM.

3. THE CONTRACTOR SHALL TOUCH UP THE MAST ARM PAINT DUE TO SCRATCHES OR CHIPS DURING THE INSTALLATION OF THE VIDS CAMERA AND CABLE.

4. THE COST FOR LABOR AND MATERIALS FOR TOUCH UP AND GROMMITS SHALL BE INCLUDED UNDER THE VIDS PAY ITEM 660-4-32.

PINELLAS COUNTY	DETAIL INDEX I.D.: 1720
	DATE: FEB/2022
VVDS INSTALLATION DETAILS	

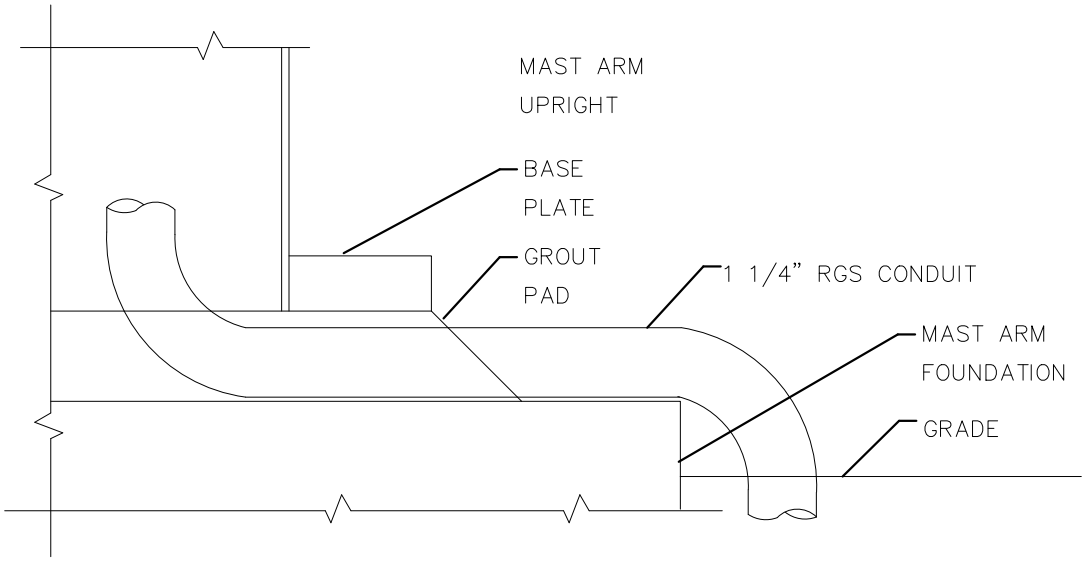

MAST ARM CONDUIT ENTRANCE DETAIL

N.T.S.

NOTES:

1. THE CONTRACTOR SHALL USE EXISTING UNDERGROUND CONDUIT TO FEED CABLE & CONDUCTORS INTO THE MAST ARM UPRIGHT. THIS DETAIL MAY BE USED IN THE EVENT THERE ARE NO EXISTING CONDUITS.

2. THE CONTRACTOR SHALL DRILL INTO THE MAST ARM STRUCTURE GROUT PAD AND FEED THE GALVANIZED STEEL CONDUIT INTO THE MAST ARM. THE DRILLED GROUT PAD SHALL BE SEALED AROUND THE CONDUIT.

3. ANY HIGH VOLTAGE CONDUCTORS SHALL BE IN A SEPARATE CONDUIT AND PULL BOXES WHERE NECESSARY.

PINELLAS COUNTY	DETAIL INDEX I.D.: 1725
	DATE: FEB/2022
MAST ARM CONDUIT ENTRANCE DETAIL	

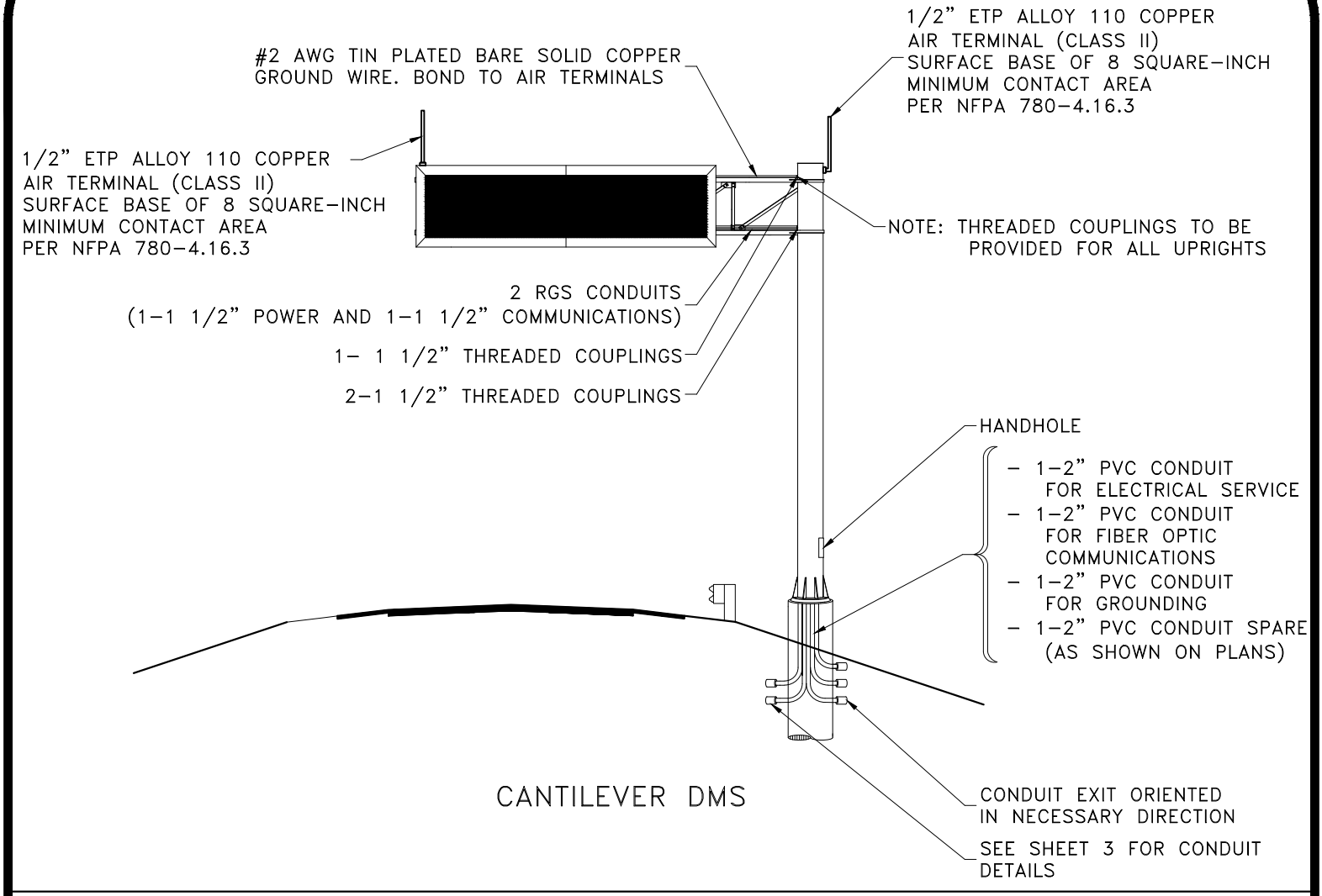

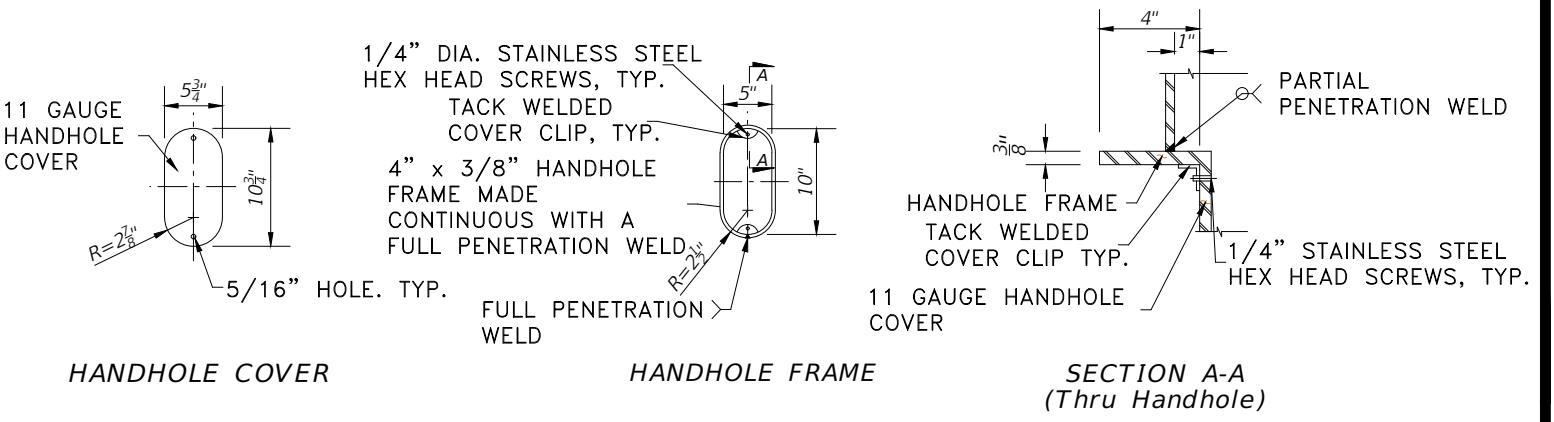

PINELLAS COUNTY	DETAIL INDEX I.D.: 1730 - SH.2
	DATE: FEB/2022
DYNAMIC MESSAGE SIGN SHEET 2 OF 6	

NOTES:

1. ALL CONDUIT ENTRANCES ON THE DMS STRUCTURE UPRIGHT SHALL BE INCLUDED IN THE DESIGN AND MANUFACTURED. NO FIELD DRILLING SHALL BE ALLOWED UNLESS APPROVED BY THE ENGINEER.

2. #2 AWG TIN-PLATED BARE SOLID COPPER GROUND WIRE TO BE BONDED TO AIR TERMINAL WITH EXOTHERMIC WELD AND RUN INTERNAL TO UPRIGHT AND THROUGH CONDUIT IN FOUNDATION.

3. SEE PC DESIGN STANDARDS FOR 332 DMS CABINET CONCRETE PAD CONFIGURATION

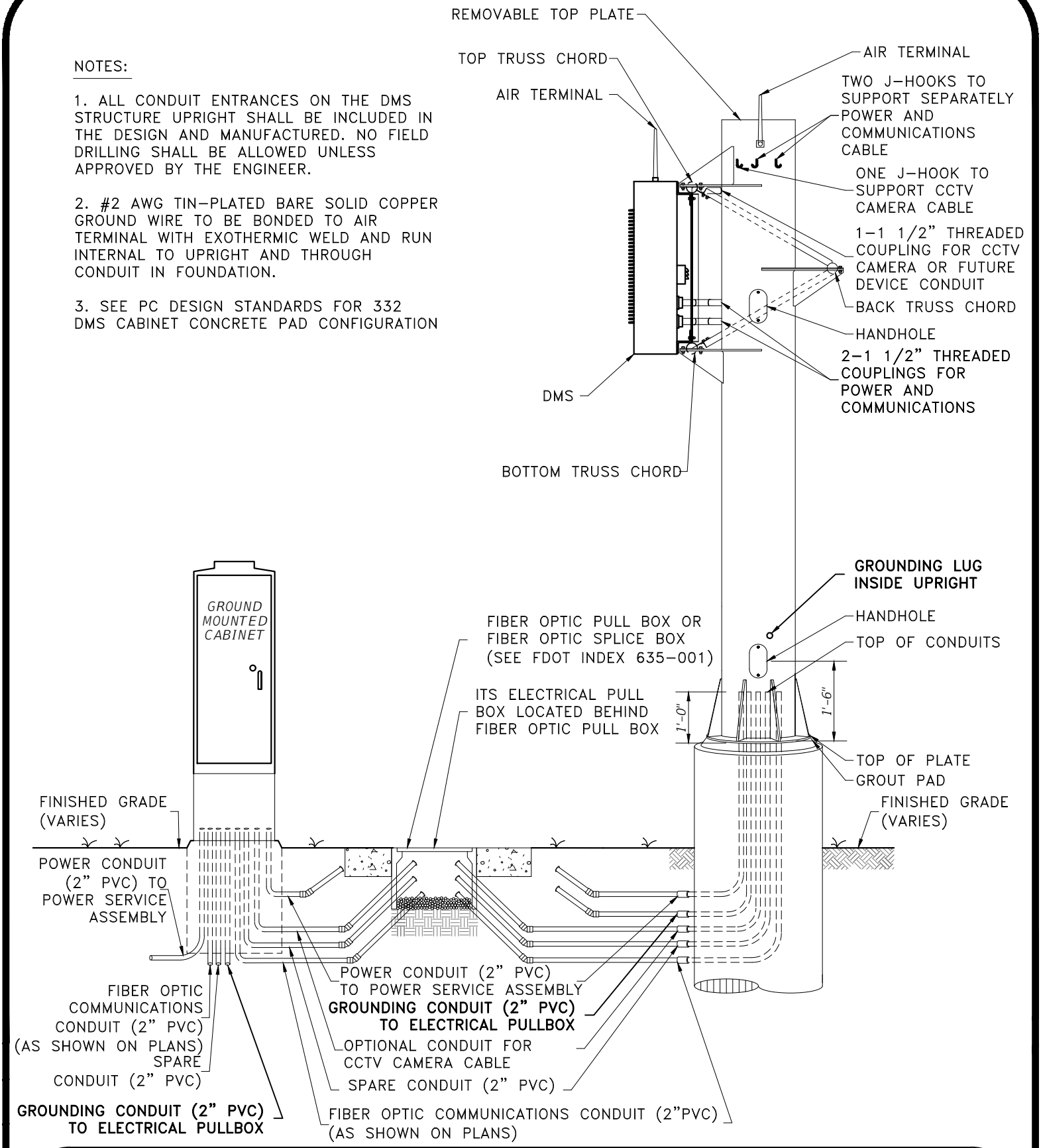

PINELLAS COUNTY	DETAIL INDEX I.D.: 1730 - SH.3
	DATE: FEB/2022
DYNAMIC MESSAGE SIGN SHEET 3 OF 6	

TYPICAL DMS CONDUIT DETAIL

NOTES:

1. REFER TO FDOT STANDARD PLANS 700-090 FOR GROUNDING ARRAY

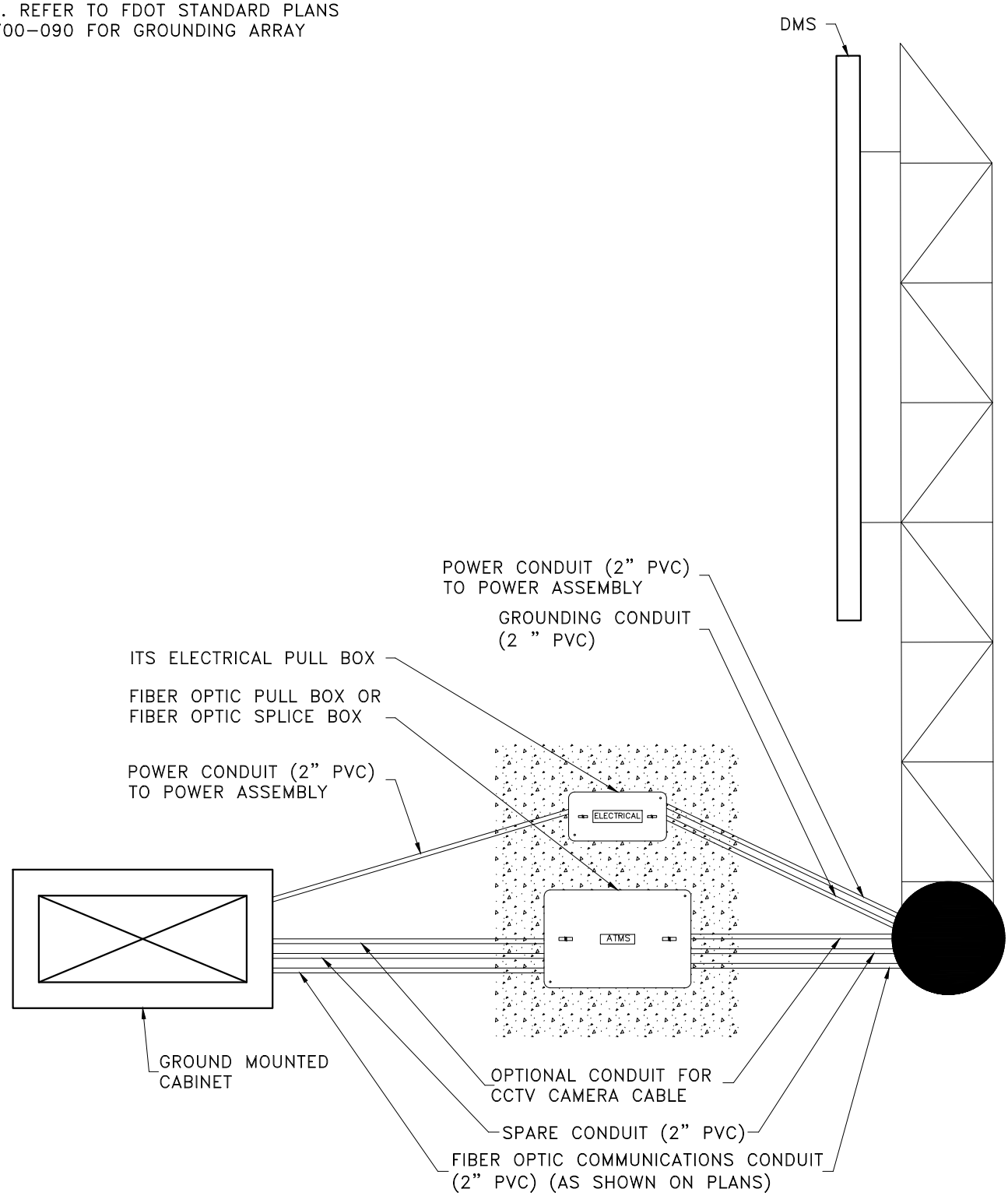

PINELLAS COUNTY	DETAIL INDEX I.D.: 1730 - SH.4
	DATE: FEB/2022
DYNAMIC MESSAGE SIGN SHEET 4 OF 6	

CCTV MOUNTING ON DMS DETAIL
(OPTIONAL)

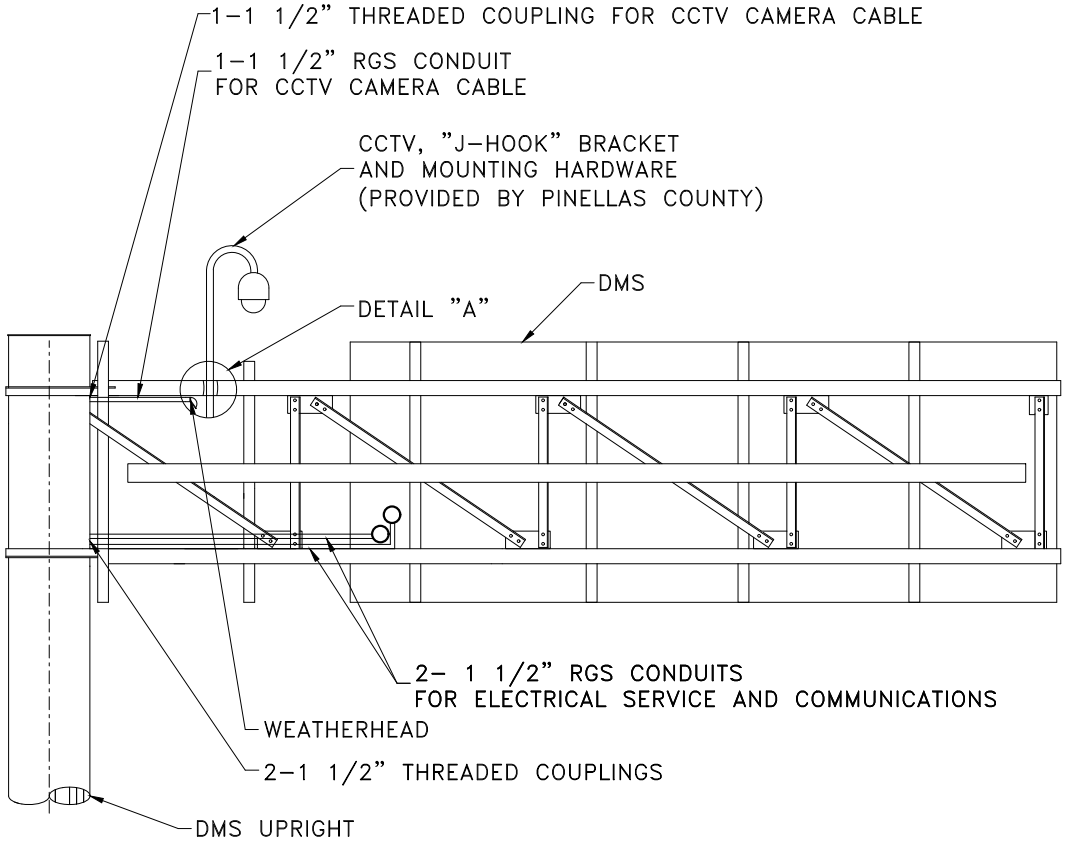

NOTES:

1. ADJUSTMENTS TO THE CCTV CAMERA LOCATION ON THE DMS SHALL BE APPROVED BY THE E.O.R.

2. ALL CONDUIT BETWEEN THE UPRIGHT & SIGN SHALL BE RGS

2. RGS CONDUIT RUNNING ON THE TRICORD SHALL BE STRAPPED EVERY 5 FEET.

3. 3-$1\frac{1}{2}$" THREADED COUPLINGS TO BE PROVIDED ON ALL DMS STRUCTURES AS SHOWN IN DETAIL ABOVE.

4. MOUNT CCTV CAMERA A MINIMUM OF 2.5 FEET ABOVE THE SIGN

5. ALL ENTRY POINTS TO STRUCTURE SHALL BE WEATHER TIGHT.

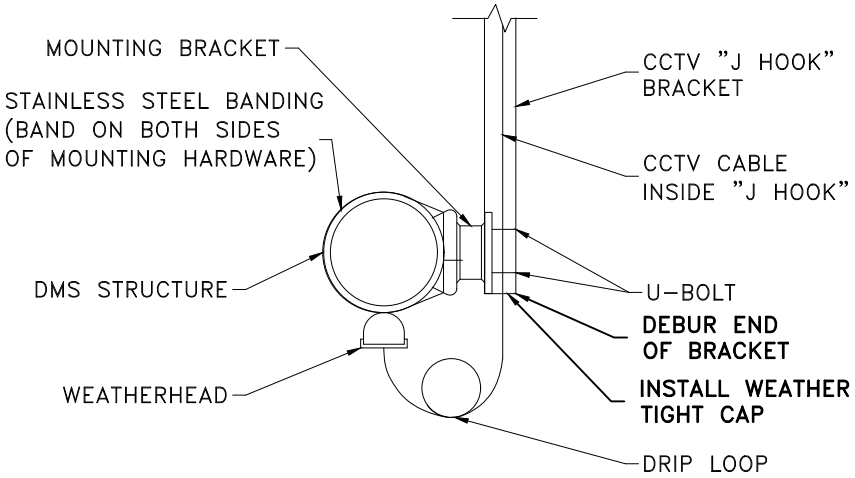

DETAIL "A"
N.T.S

PINELLAS COUNTY

DYNAMIC MESSAGE SIGN
SHEET 5 OF 6

DETAIL INDEX I.D.: 1730 - SH.5

DATE: FEB/2022

NOTE:
CABINET PAD TO BE CONSTRUCTED OF CLASS 1 3000 PSI CONCRETE WITH 6"X6" #10/#10 WELDED WIRE FABRIC PLACED 2" MIN. FROM BOTTOM OF PAD.

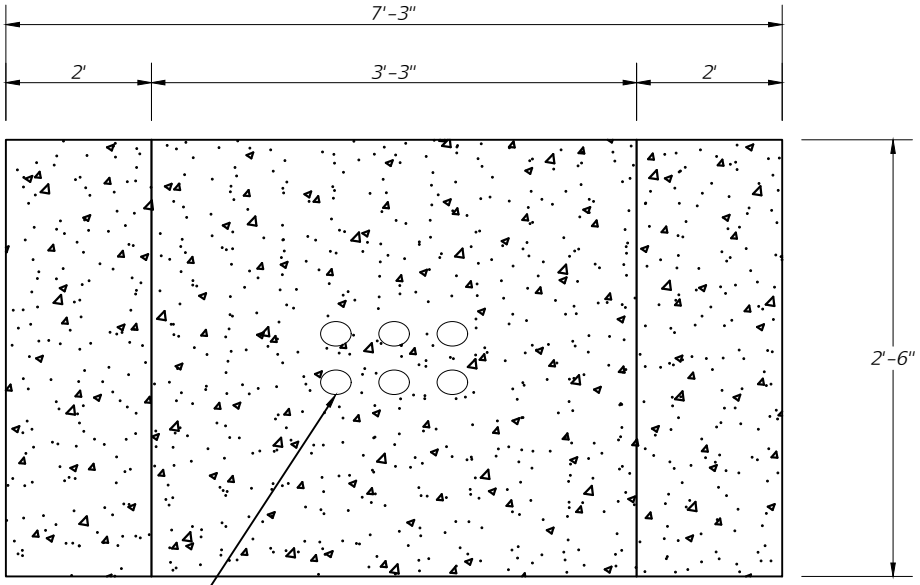

* CONDUIT
2" PVC
(TYP.)

* ADDITIONAL CONDUITS MAY BE NECESSARY IN ACCORDANCE WITH THE PLANS AND SHEET 3 OF THIS INDEX

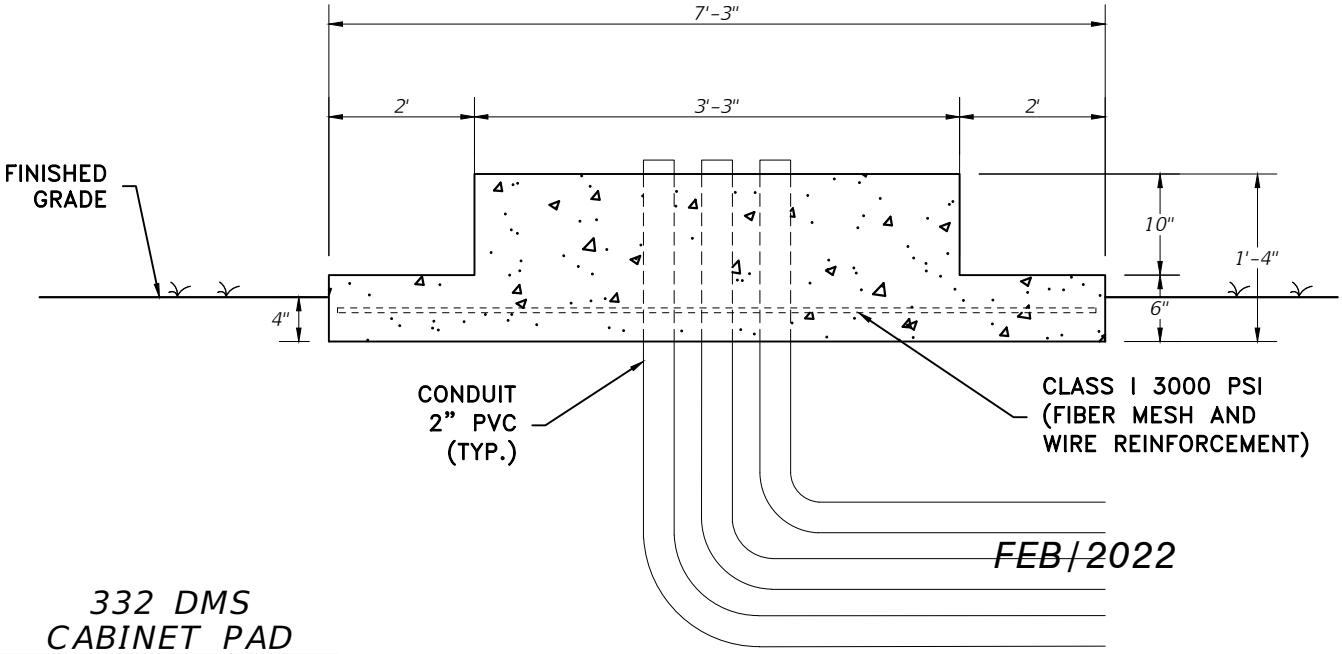

FEB/2022

332 DMS
CABINET PAD
N.T.S

PINELLAS COUNTY	DETAIL INDEX I.D.: 1730 - SH.6
	DATE: FEB/2022
DYNAMIC MESSAGE SIGN SHEET 6 OF 6	

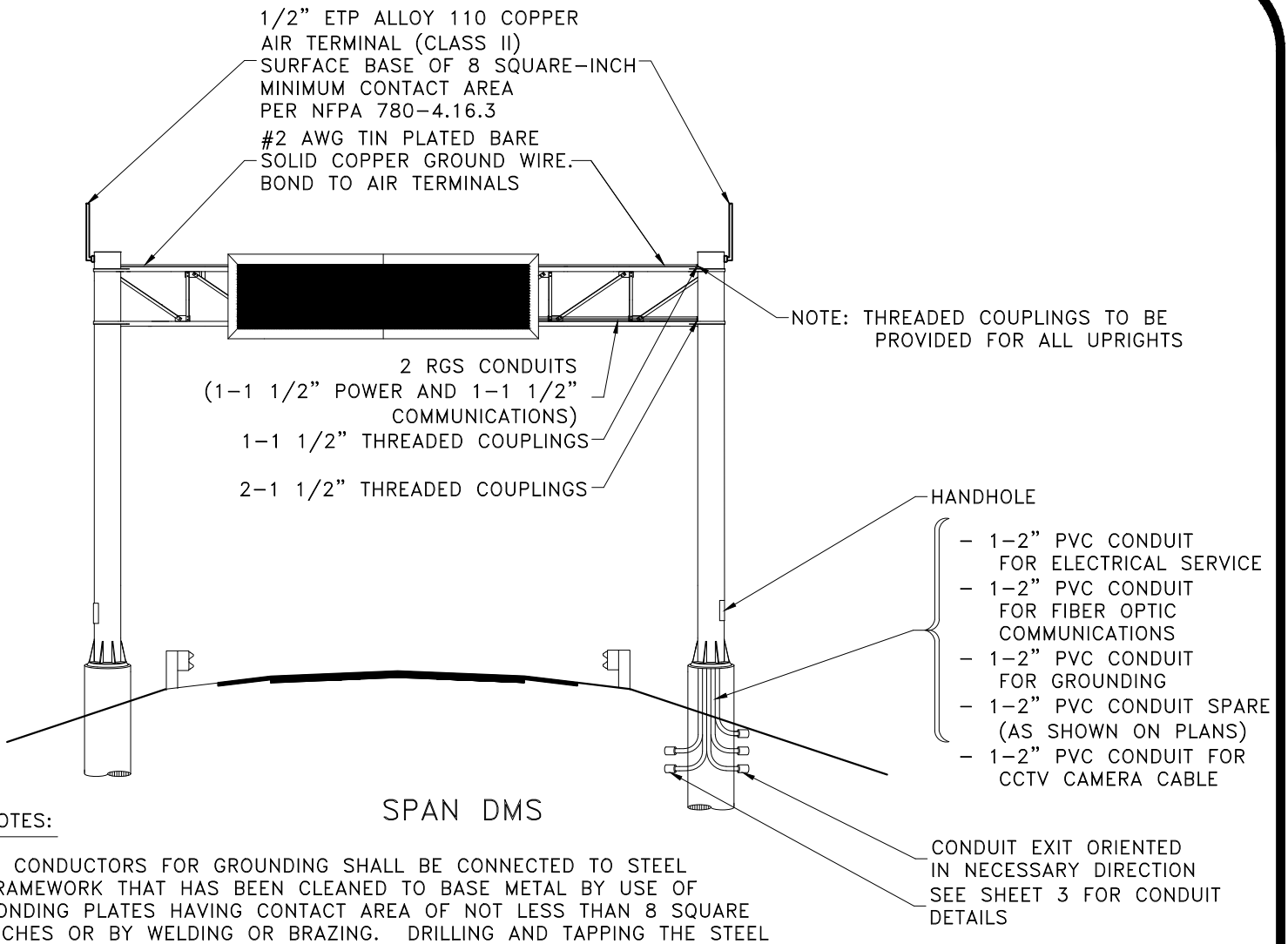

SPAN DMS

NOTES:

1. CONDUCTORS FOR GROUNDING SHALL BE CONNECTED TO STEEL FRAMEWORK THAT HAS BEEN CLEANED TO BASE METAL BY USE OF BONDING PLATES HAVING CONTACT AREA OF NOT LESS THAN 8 SQUARE INCHES OR BY WELDING OR BRAZING. DRILLING AND TAPPING THE STEEL STRUCTURE TO ACCEPT A THREADED CONNECTOR IS ALSO AN ACCEPTABLE METHOD.

2. IF STEEL FRAMEWORK IS TO BE DRILLED AND TAPPED TO ACCEPT THREADED CONNECTOR, THE THREADED CONNECTOR SHALL BE GALVANIZED AND HAVE AT LEAST 5 THREADS FULLY ENGAGED AND SECURED WITH A JAM NUT TO THE STEEL FRAMEWORK.

3. BENDS IN THE CONDUIT SHALL NOT BE LESS THAN THE MINIMUM BENDING RADIUS FOR THE CABLE CONTAINED IN THE CONDUIT.

4. ALL DATA, FIBER OPTIC AND POWER CABLES FOR THE DMS SHALL BE COMPLETELY ENCASED WITHIN THE SIGN STRUCTURE OR IN CONDUIT.

5. PERMANENTLY STAMP/MARK FOUNDATION TO CONDUIT LOCATIONS.

6. DMS CONTROLLER CABINET TO BE GROUND MOUNTED. SEE SHEET 3 OF 6 FOR DETAILS.

PINELLAS COUNTY	DETAIL INDEX I.D.: 1730 - SH.1
	DATE: FEB/2022
DYNAMIC MESSAGE SIGN SHEET 1 OF 6	

NOTE:

CABINET BASE TO BE CONSTRUCTED OF CLASS 1 3000 PSI CONCRETE WITH 6"X6" #10/#10 WELDED WIRE FABRIC PLACED 2" MIN. FROM BOTTOM OF PAD

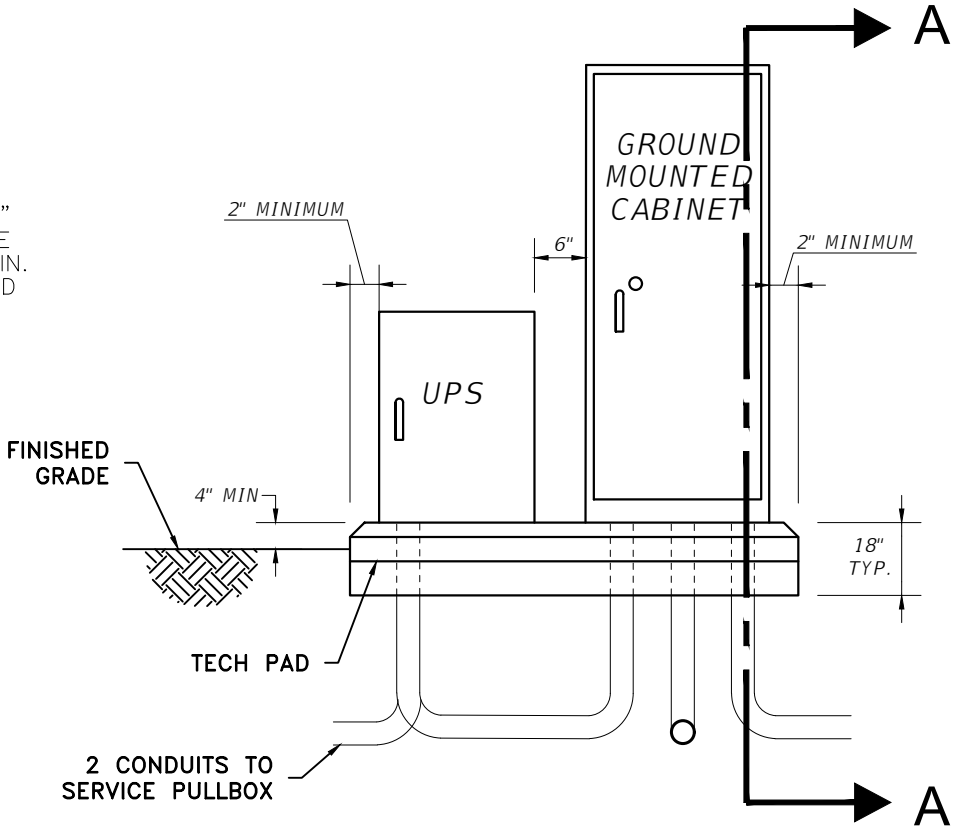

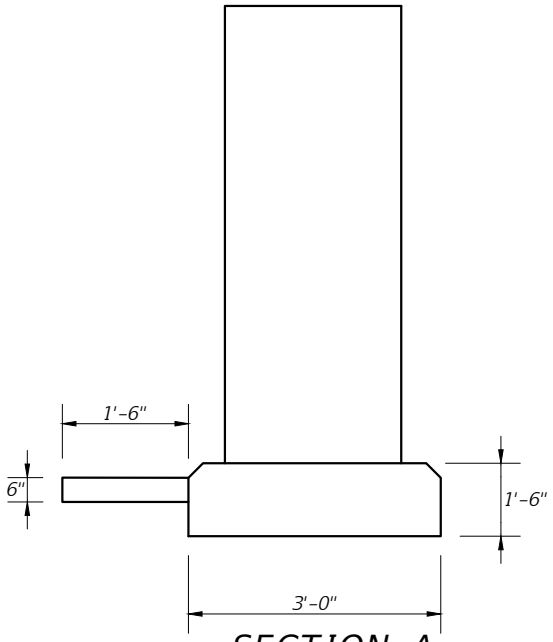

SECTION A
(CONDUITS NOT SHOWN)

TRAFFIC CABINET & PAD
N.T.S

PINELLAS COUNTY	DETAIL INDEX I.D.: 1731 - SH.1
	DATE: FEB/2022
TRAFFIC CONTROLLER CABINET SHEET 1 OF 3	

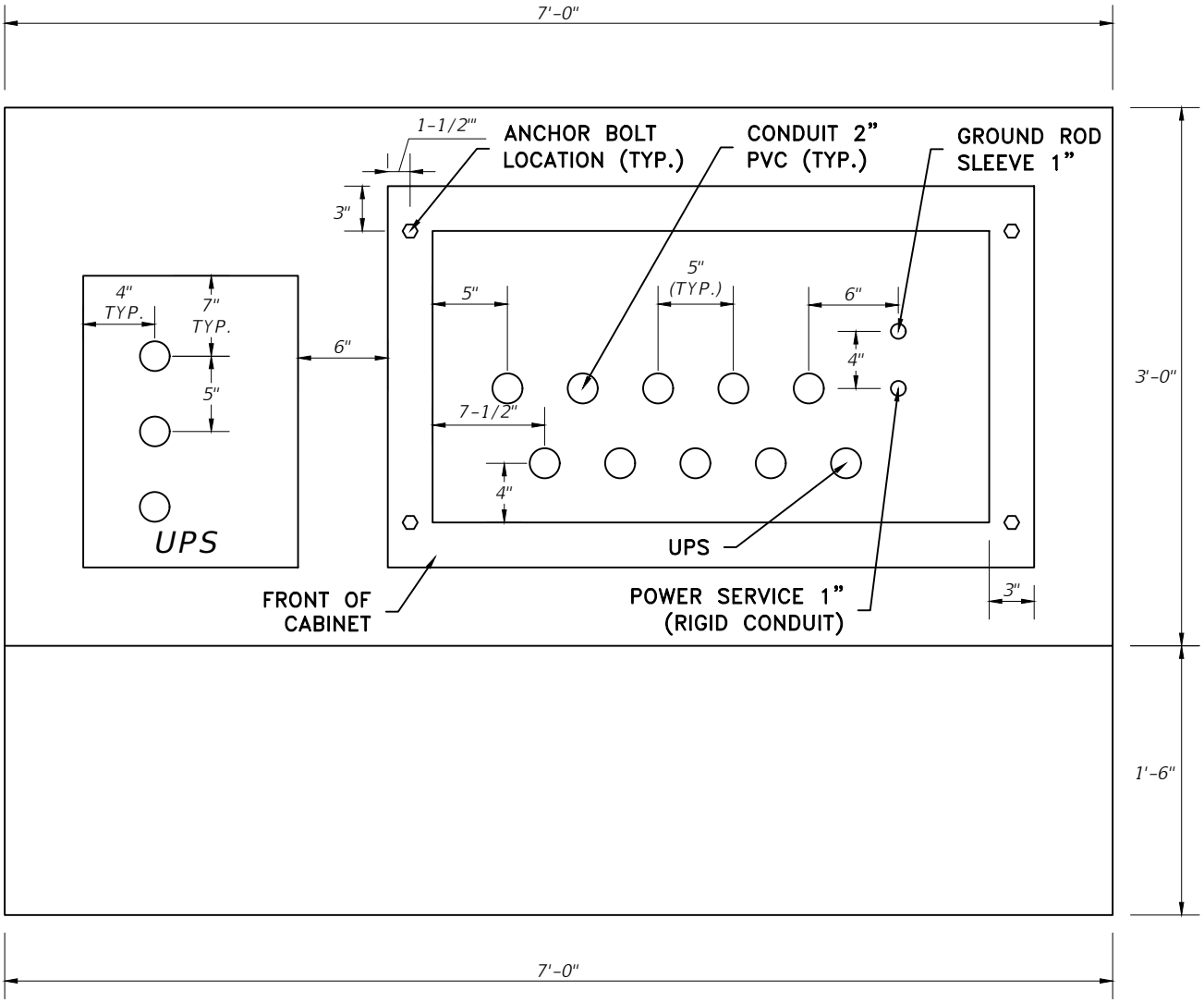

TRAFFIC CABINET CONDUIT LAYOUT
N.T.S

PINELLAS COUNTY	DETAIL INDEX I.D.: 1731 - SH.2
	DATE: FEB/2022
TRAFFIC CONTROLLER CABINET SHEET 2 OF 3	

A. LOOP AND INTERCONNECT / SPARE CONDUITS
1. SPARE TO PULL BOX OR USED FOR PED NEAR CABINET
2. LOOPS
3. SPARE TO END IN PULL BOX

B. INTERCONNECT CONDUIT
4. INTERCONNECT PULL BOX
5. INTERCONNECT SPARE

C. SIGNAL & PEDESTRIAN CONDUITS
6. TO PULL BOX
7. TO PULL BOX
8. TO PULL BOX OR POLE
9. TO PULL BOX OR POLE

D. SERVICE CONDUITS
10. TO UPS #13
11. STRAIGHT DOWN FOR GROUND ROD INSTALLATION
12. 2" RIGID GALVANIZED CONDUIT TO SERVICE BOX

E. UPS
13. TO SIGNAL CAB #10
14. TO SERVICE PULL BOX
15. TO SERVICE PULL BOX

NOTE:
1. THE CONTROLLER CABINET SHALL BE CENTERED ON BASE FRONT TO BACK

2. EDGE OF UPS CABINET SHALL BE EVEN WITH THE FRONT EDGE OF THE CONTROLLER CABINET

3. MARK IN CONCRETE PAD THE DIRECTION FOR EACH CONDUIT

4. TECH PAD TO BE LOCATED ON FRONT SIDE OF SIGNAL PAD (80"L X 18"W
X 6" DEPTH WITH 2" ABOVE GRADE)

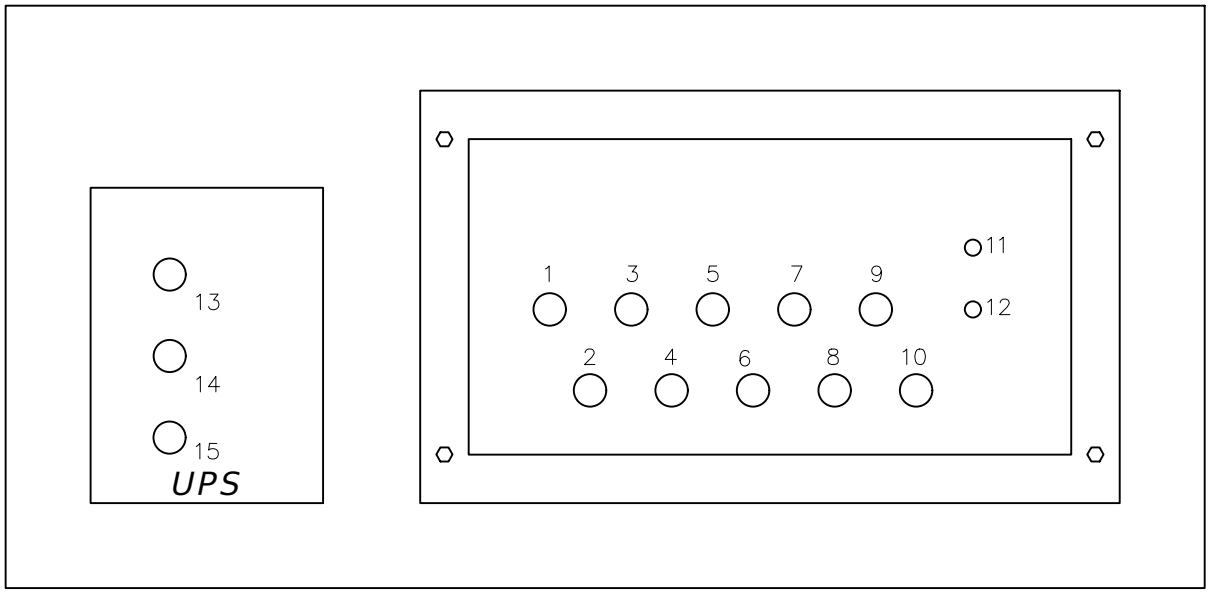

PINELLAS COUNTY

TRAFFIC CONTROLLER CABINET
SHEET 3 OF 3

DETAIL INDEX I.D.: 1731 - SH.3

DATE: FEB/2022